SNMP-based Flow Monitoring

For further information, questions and comments please send an email to medianet-cdn@cisco.com

© 2008-2010 Cisco Systems, Inc. All rights reserved. Cisco Confidential

Problem Statement

- There are several points in the network that a provider might want to monitor flows carrying media streams.
- The equipment at these points present the provider with a diversity of vendors and functions.
- The data collected at any point demonstrates a high degree of commonality.
- The equipment does not always present the data through a programmatic interface.
- The equipment does not present the data using a common data abstraction.
- An EMS/NMS needs to collect, correlate, and present data collected, computed, and maintained by a flow monitor.

© 2008-2010 Cisco Systems, Inc. All rights reserved. Cisco Confidential

Requirements

- Use the SNMP to retrieve data collected by a flow monitor.
- Define a MIB module (or a set of MIB modules) that describes data collected by a flow monitor.
- The MIB module(s) must present an abstraction general enough to support a wide diversity of equipment and vendors.
- The MIB module(s) must present an abstraction that mitigates impacting changes by market and technology trends.
- The MIB module(s) must present an extensible abstraction, so as to accommodate new technologies and features over time.
- As devices scale their flow monitoring capabilities, additional data export mechanisms may be required.

© 2008-2010 Cisco Systems, Inc. All rights reserved. Cisco Confidential

Non-Goals

- The MIB module(s) should not define objects that describe configuration of the flow monitor.

  The configuration of a flow data analyzer or a flow monitoring feature varies enough between equipment and vendors that any attempt to standardize this would be futile, at this time.

- The MIB module(s) should not define objects that describe aspects of a single technology or deployment.

  For example, it is not the intention to describe program identifiers, as such data only applies to deployment by an MSO.

© 2008-2010 Cisco Systems, Inc. All rights reserved. Cisco Confidential

Overview

- To address the stated problem and satisfy the stated requirements, we propose the following MIB definitions

  CISCO-FLOW-MONITOR-TC-MIB

  This MIB module defines textual conventions used to describe flow monitoring data.

  CISCO-FLOW-MONITOR-MIB

  This MIB module defines objects that describe monitored flows carrying media streams, statistics relating to these flows, and a history of computed metrics for these flows.

  CISCO-MDI-METRICS-MIB

  This MIB module defines objects describing MDI metrics.

  CISCO-RTP-METRICS-MIB

  This MIB module defines objects describing RTP metrics.

  CISCO-IP-CBR-METRICS-MIB

  This MIB module defines objects describing IP CBR metrics.

© 2008-2010 Cisco Systems, Inc. All rights reserved. Cisco Confidential

Concepts

- **Traffic Flow**

  A stream of packets conforming to a traffic class (e.g., all packets matching a particular source IP address, destination IP address, source UDP port, and destination UDP port).

- **Flow Monitor**

  A flow monitor represents a hardware or software entity that classifies traffic flows, monitors flow data, and periodically computes flow metrics.

- **Monitored Flow**

  A monitored flow represents a traffic flow for which a flow monitor collects data, periodically computes metrics, and maintains alarm state.

- **Flow Point**

  A flow point represents the ingress or egress of a traffic flow. Examples include an interface, an Ethernet VLAN, and an ATM VC.

- **Standing Condition**

  An standing condition represents a lasting error, fault, or warning, resulting from the application of a set of criteria to the state of an entity, such as a flow monitor or a monitored flow. For example, a flow monitor may assert an standing condition if the MLR exceeds a configured threshold.

- **Alarm Condition**

  A standing condition that causes the generation of an alarm notification when it transitions between states.

- **Alarm Severity**

  Each alarm condition has an associated alarm severity, which indicates the relative disposition of the alarm condition when asserted by the device. For example, a provider may regard a flow stop alarm as having a higher severity than a flow's loss fraction exceeding a configured threshold.

- **Alarm Group**

  A standing condition that causes an alarm to be raised when it has become asserted for a configured percentage of entities. For example, a flow monitor may raise an critical alarm if 50% of the flows arriving at a given interface exhibit a stop condition.

© 2008-2010 Cisco Systems, Inc. All rights reserved. Cisco Confidential

CISCO-FLOW-MONITOR-TC-MIB

- In the interest of providing an extensible MIB definition, it is desirable to isolate certain textual conventions
  - These textual conventions may need to be modified to support additional technologies.
  - By isolating their definitions, we eliminate the need to change the CISCO-FLOW-MONITOR-MIB, thereby increasing its stability and quality.
- This MIB module defines textual conventions that describes three aspects of media monitoring that we want to be extensible
  - Description of a Monitored Flow
  - Description of Monitored Flow Ingress/Egress
  - Description of Computed Metrics and Measurements
  - Description of Alarm Conditions

© 2008-2010 Cisco Systems, Inc. All rights reserved. Cisco Confidential

Monitored Flow Identification

- The CISCO-FLOW-MONITOR-MIB does not use the fields used to classify a traffic flow to identify a monitored flow. The following list summarizes the reasons for this

  The fields used to classify a monitored flow can vary with underlying bearer channel technologies, network domain, and transport.

  We need to consider the possibility of new bearer channel technologies, network domains, and transports in the future.

- Thus, the CISCO-FLOW-MONITOR-MIB uses a pair of arbitrary integer-values to uniquely identify a monitored flow

  Flow Monitor Identifier – uniquely identifies the flow monitor that created the monitored flow.

  Monitored Flow Identifier – uniquely identifies the monitor flow with respect to the flow monitor that created it.

© 2008-2010 Cisco Systems, Inc. All rights reserved. Cisco Confidential

Monitored Flow Identification TCs

FlowMonitorIdentifier = Unsigned32 (1..4294967295)

// An arbitrary integer-value that uniquely identifies a flow monitor. A media monitor may be a hardware or software entity.

FlowIdentifier = Unsigned32 (1..4294967295)

// An arbitrary integer-value that uniquely identifies a monitored flow.

© 2008-2010 Cisco Systems, Inc. All rights reserved. Cisco Confidential

Flow Point Identification

- It is sometimes desirable to know the points of ingress and egress of monitored flow, especially when monitoring traffic flows carrying media streams through a transport device. However, there are well understood limitations

  This is not always possible! For example, if a flow monitor has been configured on the point of ingress of a two-stage router, the point of egress is not yet known.

  This is not always practical! For example, there exist many points of egress for a multicast flow.

  This is not always meaningful! For example, a video data analyzer may only have a single point of ingress and no point of egress.

- Under ideal circumstances, it should be possible to identify a flow point by the ifIndex-value assigned to the interface representing it. However, not all operating system represent all points of ingress and egress in the ifTable.
- Thus, the CISCO-FLOW-MONITOR-TC-MIB defines textual conventions describing a variety of flow points, independent of whether they're represented in the ifTable.

  These textual conventions are extensible, allowing new flow points to be added over time.

© 2008-2010 Cisco Systems, Inc. All rights reserved. Cisco Confidential

Flow Monitor Point Identification TCs

```
FlowPointType = INTEGER {
        other,          // A type ingress/egress point unrecognized by the MIB implementation.
        unknown,        // The ingress/egress point is not known.
        none,           // The ingress/egress point doesn't exist.
        interface,      // The ingress/egress point is an interface.
        atmVC,          // The ingress/egress point is an ATM virtual circuit.
        frDlc,          // The ingress/egress point is a Frame Relay DLC.
        dot1qVlan       // The ingress/egress point is an IEEE 802.1q VLAN.
}
        // Represents a type of flow point.
FlowPointIdentifier = OCTET STRING (0..255)
        // Identifies an flow point.
FlowPointInterface = OCTET STRING (4)
        // Identifies an interface represented by the ifTable, which consists of the four octets comprising the ifIndex-value assigned to the interface (in
        network byte order).
FlowPointAtmVC = OCTET STRING (8)
        // Identifies an ATM virtual circuit, which consists of three fields (all integer-values are in network byte order)::
        //    1) four octets comprising the ifIndex-value assigned to the ATM logical interface carrying the ATM VC;
        //    2) two octets comprising the ATM VPI of the virtual circuit;
        //    3) two octets comprising the ATM VCI of the virtual circuit
FlowPointFrDlc = OCTET STRING (6)
        // Identifies a Frame Relay DLC, which consists of two fields (all integer-values are in network byte order):
        //    1) four octets comprising the ifIndex-value assigned to the Frame Relay interface carrying the circuit;
        //    2) two octets comprising the Frame Relay DLCI of the circuit.
FlowPointDot1qVlan = OCTET STRING (6)
        // Identifies an IEEE 802.1q VLAN, which consists of two fields (all integer-values are in network byte order):
        //    1) four octets comprising the ifIndex-value assigned to the Ethernet interface supporting the VLAN;
        //    2) two octets comprising the tag assigned to the VLAN.
```

© 2008-2010 Cisco Systems, Inc. All rights reserved. Cisco Confidential

Computed Metrics & Measurements

- A flow monitor computes metrics and measurements for each monitored flow.
- In some managed environments, an EMS/NMS may not have access to a flow monitor's configuration.
  - The configuration might be done through a different management entity (e.g., a local console).
  - The configuration might be downloaded by an external policy server.
  - The device supporting the flow monitor may not make the configuration available through a programmatic interface.
- Thus, the CISCO-FLOW-MONITOR-TC-MIB defines a textual convention that describes the metrics and measurements computed for a monitored flow.
  - This textual convention is extensible, allowing new metrics and measurements to be added over time.

© 2008-2010 Cisco Systems, Inc. All rights reserved. Cisco Confidential

Measurements & Metrics TCs

```
FlowMetrics = BITS {
    mdi,            // The flow monitor computes MDI metrics for the monitored flow.
    rtp,            // The flow monitor computes RTP metrics for the monitored flow.
    ipCbr           // The flow monitor computes metrics for an IP monitored flow with CBR.
}
        // Denotes the metrics and measures a flow monitor computes for the monitored flow.

FlowCfgRateType = INTEGER {
    auto,           // The flow monitor automatically determines the MR.
    ipPktRate,      // The flow monitor computes DF using a configured IP packet rate.
    ipBitRate,      // The flow monitor computes DF using a configured IP bit rate.
    mediaBitRate    // The flow monitor computes DF using a configured media bit rate.
}
        // Denotes the MR used by the flow monitor in computing the DF.

FlowBitRateUnits = INTEGER {
    bps,            // Bits Per Second
    kbps,           // Kilobits Per Second
    mbps,           // Megabits Per Second
    gbps            // Gigabits Per Second
}
        // Denotes the units in which a flow bit rate was measured.
```

© 2008-2010 Cisco Systems, Inc. All rights reserved. Cisco Confidential

Measurements & Metrics TCs (cont.)

```
FlowMetricScale = INTEGER {
    yocto,      // 10^-24
    zepto,      // 10^-21
    atto,       // 10^-18
    femto,      // 10^-15
    pico,       // 10^-12
    nano,       // 10^-9
    micro,      // 10^-6
    milli,      // 10^-3
    units,      // 10^0
    kilo,       // 10^3
    mega,       // 10^6
    giga,       // 10^9
    tera,       // 10^12
    exa,        // 10^15
    peta,       // 10^18
    zetta,      // 10^21
    yotta       // 10^24
}
```

// Denotes a data scaling factor, represented with an International System of Units (SI) prefix.

// A MIB module can abstract a fixed-point value by defining three objects:

// 1) One object defines the value, which uses the FlowMetricValue textual convention.

// 2) One object defines the scale, which uses the FlowMetricScale textual convention.

// 3) One object defines the precision, which uses the FlowMetricPrecision textual convention.

© 2008-2010 Cisco Systems, Inc. All rights reserved. Cisco Confidential

Measurements & Metrics TCs (cont.)

FlowMetricPrecision = Integer32 (-8..-1 | 1..9)

// Denotes the precision of fixed-point value.

// A MIB module can abstract a fixed-point value by defining three objects:

// 1) One object defines the value, which uses the FlowMetricValue textual convention.

// 2) One object defines the scale, which uses the FlowMetricScale textual convention.

// 3) One object defines the precision, which uses the FlowMetricPrecision textual convention.

// If an instance of an object of this type has a value in the range of 1 to 9, then it represents the number of decimal places in the factional part of the associated value. For example, if the MLR computed for a flow is 350.9E-6, then the associated value will be 3509, the scale will be 'micro', and the precision will be 1.

// If an instance of an object of this type has a value in the range of -8 to -1, then it represents the number of accurate digits in the associated value. For example, if the jitter measured for flow can range between -100,000 and 100,000 microseconds in 10 microsecond increments, with an accuracy of +/- 5 microseconds, would have a precision of -2 and a scale of 'micro'.

FlowMetricValue = Integer32 (-1000000000..1000000000)

// Denotes the value of a fixed-point value before scaling.

// A MIB module can abstract a fixed-point value by defining three objects:

// 1) One object defines the value, which uses the FlowMetricValue textual convention.

// 2) One object defines the scale, which uses the FlowMetricScale textual convention.

// 3) One object defines the precision, which uses the FlowMetricPrecision textual convention.

© 2008-2010 Cisco Systems, Inc. All rights reserved. Cisco Confidential

Alarm TCs

FlowMonitorConditions = OCTET STRING (SIZE (0..255))

// A binary string-value that denotes a set of standing/alarm conditions.

FlowMonitorConditionIdentifier = Unsigned32 (1..2040)

// A integer-value that identifies a standing/alarm condition in the scope of a set of standing/alarm conditions.

FlowMonitorConditionsProfile = Unsigned32 (1..4294967295)

// An arbitrary integer-value that uniquely identifies a profile describing standing conditions for flow monitor and monitored flows.

FlowMonitorAlarmGroupIdentifier = Unsigned32 (1..4294967295)

// An arbitrary integer-value that uniquely identifies an alarm group.

FlowSetIdentifier = Unsigned32 (1..4294967295)

// An arbitrary integer-value that uniquely identifies a set of monitored flows.

© 2008-2010 Cisco Systems, Inc. All rights reserved. Cisco Confidential

CISCO-REPORT-INTERVAL-TC-MIB

- The IETF has published a MIB module defining textual conventions for performance history based on 15-minute intervals (RFC-3593).
- However, we have technologies that have other requirements for performance data collection.

  For example, the Cisco Network Registrar (CNR) allows customers to configure performance data collection based on needs specified by the deployment.
- Thus, Cisco defined their own textual conventions that provide for performance history based on application-dependent intervals.
- The CISCO-FLOW-MONITOR-MIB can reuse these textual conventions to describe video metric history.
- The following slide defines these textual conventions.

© 2008-2010 Cisco Systems, Inc. All rights reserved. Cisco Confidential

Reporting Interval TCs

ReportCurrentCount = Gauge32

// Denotes an integer-value representing a counter associated with the measurement in the current report interval. The length of a report interval is configured previous to the measurement.

ReportIntervalCount = Gauge32

// Denotes an integer-value representing the value of a counter associated with the measurement taken during a previous report interval.

© 2008-2010 Cisco Systems, Inc. All rights reserved. Cisco Confidential

CISCO-FLOW-MONITOR-MIB

- The structure of this MIB module breaks down into four categories of objects and notifications
  - Objects describing flow monitors.
  - Objects describing monitored flows.
  - Objects describing computed metrics and measurements.
  - Objects describing alarms.

© 2008-2010 Cisco Systems, Inc. All rights reserved. Cisco Confidential

Flow Monitors & Monitored Flows

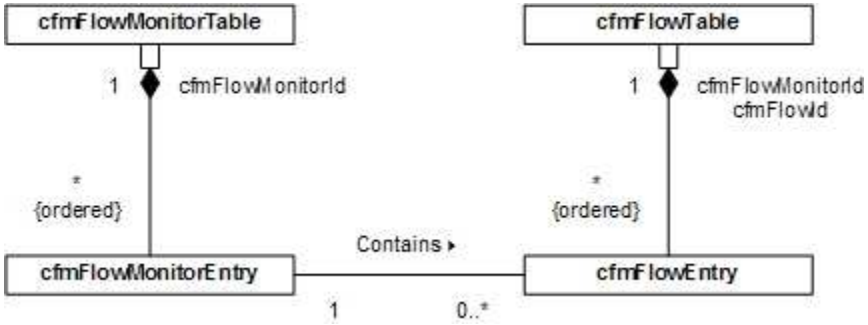

© 2008-2010 Cisco Systems, Inc. All rights reserved. Cisco Confidential

Flow Monitors

partial table cfmFlowMonitorEntry [cvmFlowMonitorId]

{

cfmFlowMonitorId : FlowMonitorIdentifier <access=not-accessible>

// This object uniquely identifies the flow monitor.

cfmFlowMonitorDescr : SnmpAdminString <access=read-only>

// This object indicates a human-readable description of the flow monitor.

cfmFlowMonitorCaps : FlowMetrics <access=read-only

// This object indicates the capabilities of the flow monitor. Specifically, the value of this column indicates a '1' for each set of flow metrics the flow monitor is capable of measuring.

cfmFlowMonitorFlowCount : Gauge32 <access=read-only>

// This object uniquely identifies the number of monitored flows currently maintained by the flow monitor.

cfmFlowMonitorConditionsProfile : FlowMonitorConditionsProfile <access=read-only>

// This object indicates the profile that describes the standing conditions monitored for the flow monitor.

cfmFlowMonitorConditions : FlowMonitorConditions <access=read-only>

// This object indicates the current standing conditions for the flow monitor. If the value of this column is the null string, then no standing conditions have been defined for the flow monitor.

cfmFlowMonitorAlarms : FlowMonitorConditions <access=read-only>

// This object indicates the current alarm conditions for the flow monitor. If the value of this column is the null string, then no standing conditions have been defined for the flow monitor.

}

© 2008-2010 Cisco Systems, Inc. All rights reserved. Cisco Confidential

Flow Monitors (cont.)

partial table cfmFlowMonitorEntry [cvmFlowMonitorId]

{

cfmFlowMonitorAlarmSeverity : CiscoAlarmSeverity <access=read-only>

// This object indicates the highest severity alarm currently raised by the flow monitor and the monitored flows maintained by the flow monitor.

cfmFlowMonitorAlarmCriticalCount : Gauge32 <access=read-only>

// This object indicates the number of critical alarm conditions currently raised for the monitored flows maintained by the flow monitor.

cfmFlowMonitorAlarmMajorCount : Gauge32 <access=read-only>

// This object indicates the number of major alarm conditions currently raised for the monitored flows maintained by the flow monitor.

cfmFlowMonitorAlarmMinorCount : Gauge32 <access=read-only>

// This object indicates the number of minor alarm conditions currently raised for the monitored flows maintained by the flow monitor.

cfmFlowMonitorAlarmWarningCount : Gauge32 <access=read-only>

// This object indicates the number of warning alarm conditions currently raised for the monitored flows maintained by the flow monitor.

cfmFlowMonitorAlarmInfoCount : Gauge32 <access=read-only>

// This object indicates the number of informational alarm conditions currently raised for the monitored flows maintained by the flow monitor.

}

cfmFlowMonitorTableChanged : TimeStamp <access=read-only>

// This object indicates the value of sysUpTime the last time a row was created/destroyed in the cfmFlowMonitorTable.

© 2008-2010 Cisco Systems, Inc. All rights reserved. Cisco Confidential

Monitored Flows

```
partial table cfmFlowEntry [cfmFlowMonitorId, cfmFlowId]
{
    cfmFlowId : FlowIdentifier <access=not-accessible>
        // This object uniquely identifies the monitored flow.
    cfmFlowNext : RowPointer <access=read-only>
        // This object indicates a reference to a row in another table containing additional data relating to the monitored flow.
    cfmFlowDescr : SnmpAdminString <access=read-only>
        // This object indicates a human-readable description of the flow.
    cfmFlowCreateTime : TimeStamp <access=read-only>
        // This object indicates the value of sysUpTime when the corresponding flow monitor created the row.
    cfmFlowDiscontinuityTime : TimeStamp <access=read-only>
        // This object indicates the value of sysUpTime on the most recent occasion at which any one or more of monitored row's
        counters suffered a discontinuity (e.g., process restart or a failover event).
    cfmFlowExpirationInterval : Unsigned32 (0..4294967295) <access=read-only, units="seconds">
        // This object indicates the flow expiration interval. If the flow monitor observes no packets received for the traffic flow in this
        interval, then it expires the traffic flow; that is, it stops monitoring the traffic and removes the corresponding row from the
        cfmFlowTable. If this column is '0', then the traffic flow was statically configured, as opposed to dynamically learned.
    cfmFlowDirection : INTEGER { unknown, ingress, egress } <access=read-only>
        // This object indicates the direction of the monitored flow where the flow monitor collects data.
    cfmFlowAdminStatus : INTEGER { enabled, disabled, expire } <access=read-write>
        // This object specifies the desired state of the traffic flow.
    cfmFlowOperStatus : INTEGER { enabled, disabled } <access=read-only>
        // This object specifies the operational status of the traffic flow.
}
```

© 2008-2010 Cisco Systems, Inc. All rights reserved. Cisco Confidential

Monitored Flows

```
partial table cfmFlowEntry [cfmFlowMonitorId, cfmFlowId]
{
    cfmFlowIngressType : FlowPointType <access=read-only>
        // This object indicates the type of port the monitored flow arrives at.
    cfmFlowIngress : FlowPointIdentifier <access=read-only>
        // This object identifies the port the monitored flow arrives at.
    cfmFlowEgressType : FlowPointType <access=read-only>
        // This object indicates the type of port the monitored flow leaves from.
    cfmFlowEgress : FlowPointIdentifier <access=read-only>
        // This object identifies the port the monitored flow leaves from.
}
cfmFlowTableChanged : TimeStamp <access=read-only>
    // This object indicates the value of sysUpTime the last time the device created/destroyed a row in the cfmFlowTable.
```

© 2008-2010 Cisco Systems, Inc. All rights reserved. Cisco Confidential

Monitored Flow Encapsulation

- The CISCO-FLOW-MONITOR-MIB defines several tables that abstract data relating to a monitored flow's encapsulation.
- Each table contains data relating to a layer of encapsulation.
- Each table defines an object that links a row to a row in another table.
- The next slide illustrates a UML diagram showing the relationship between the rows in these tables.

© 2008-2010 Cisco Systems, Inc. All rights reserved. Cisco Confidential

Monitored Flow Encapsulation (cont.)

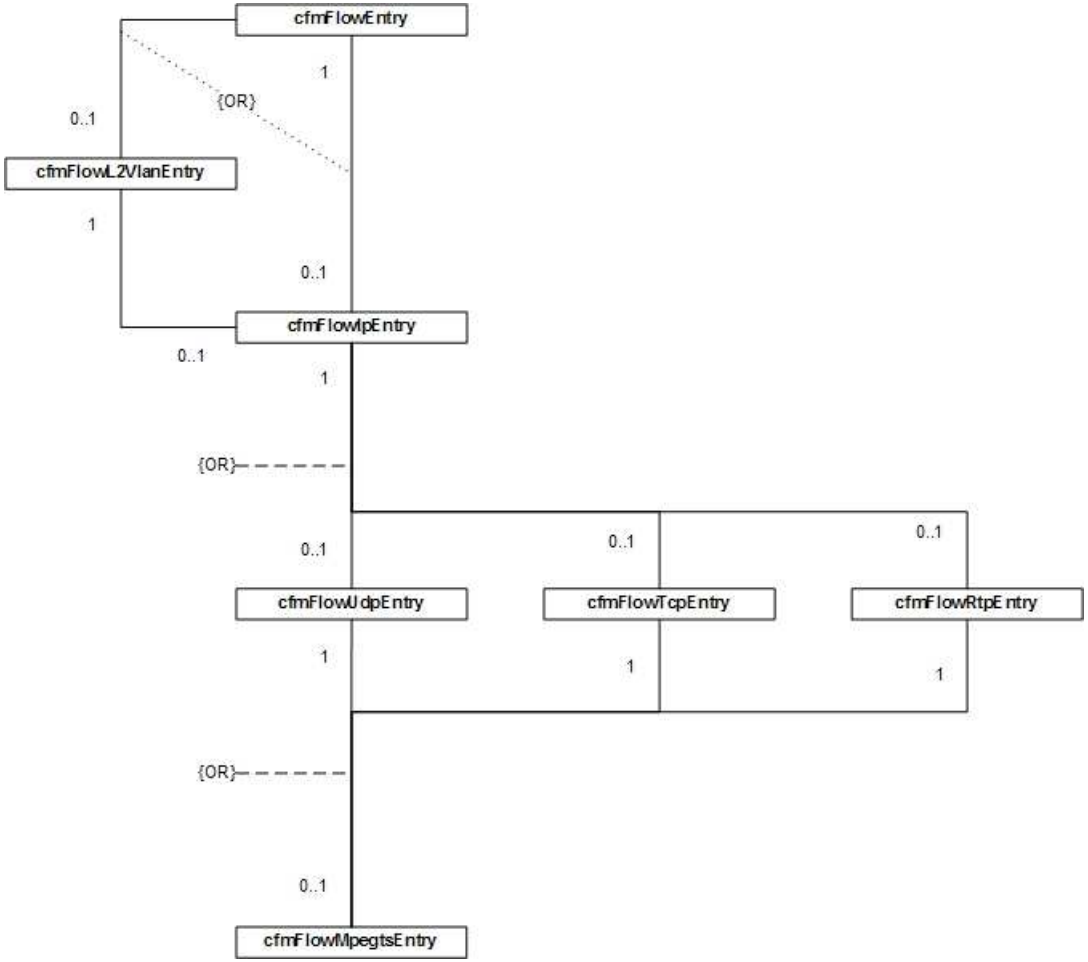

© 2008-2010 Cisco Systems, Inc. All rights reserved. Cisco Confidential

Monitored Flow Encapsulation (cont.)

- An EMS/NMS gleans data relating the encapsulation of a monitored flow by following these steps

  Starting with the row in the cfmFlowTable representing the monitored flow.

  Follow the value of cfmFlowNext to a row in the cfmFlow<xxx>Table, which represents the first layer of encapsulation.

  Follow the value of cfmFlow<xxx>Next ot a row in the cfmFlow<yyy>Table, which represents the next layer of encapsulation.

  Continue the last step until the value of cfmFlow<yyy>Next is the null OID.

- Consider a monitored flow using a UDP/RTP/MPEGTS encapsulation. The figure to the right illustrates a representation of this monitored flow.
- The following slides provide details regarding the tables that contain data relating a monitored flow's encapsulation.

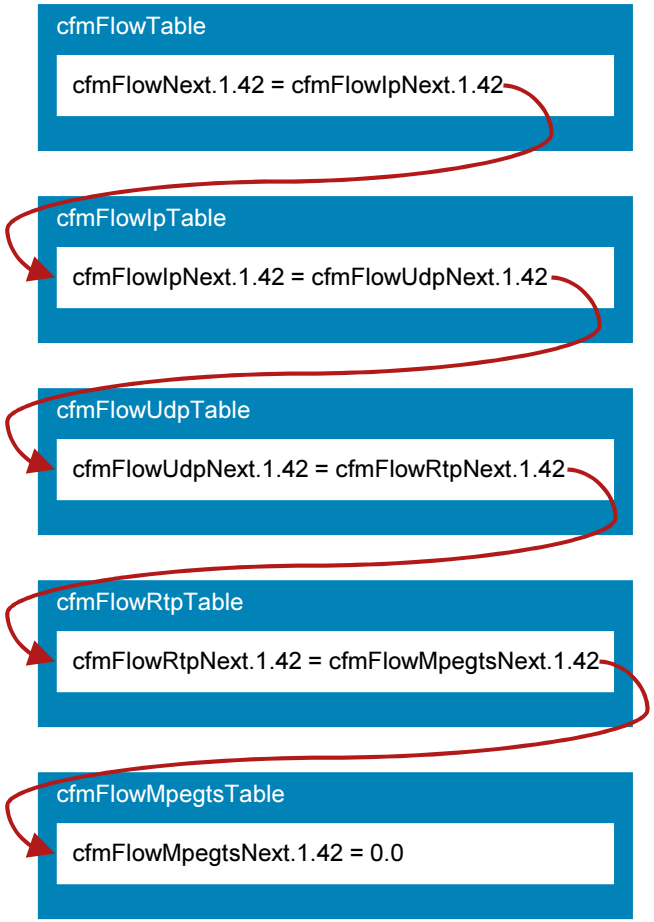

© 2008-2010 Cisco Systems, Inc. All rights reserved. Cisco Confidential

Monitored Flows – Layer 2 VLAN Data

table cfmFlowL2VlanEntry [cfmFlowMonitorId, cfmFlowId]

{

cfmFlowL2VlanNext : RowPointer <access=read-only>

// This object indicates to a reference a row in another table containing additional data relating to the monitored flow.

cfmFlowL2VlanId : VlanId <access=read-only>

// This object indicates the tag associated with the VLAN carrying the monitored flow.

cfmFlowL2VlanCos : Layer2Cos <access=read-only>

// This object indicates the layer 2 COS of the monitored flow.

}

cfmFlowL2VlanTableChanged : TimeStamp <access=read-only>

// This object indicates the value of sysUpTime the last time the device created, modified, or destroyed a row in cfmFlowL2VlanTable.

© 2008-2010 Cisco Systems, Inc. All rights reserved. Cisco Confidential

Monitored Flows – IP Data

table cfmFlowIpEntry [cfmFlowMonitorId, cfmFlowId]

{

cfmFlowIpNext : RowPointer <access=read-only>

// This object indicates to a reference a row in another table containing additional data relating to the monitored flow.

cfmFLowIpVrf : VrfName <access=read-only>

// This object indicates the VRF instance containing the destination and source IP addresses.

cfmFlowIpAddrType : InetAddressType <access=read-only>

// This object indicates the Internet address type of the corresponding instance of cfmFlowIpSrcAddr and cfmFlowIpDstAddr.

cfmFlowIpSrcAddr : InetAddress <access=read-only>

// This object indicates the source address of the monitored flow.

cfmFlowIpDstAddr : InetAddress <access=read-only>

// This object indicates the destination address of the monitored flow.

cfmFlowIpTrafficClass : Unsigned32 (0..255) <access=read-only>

// This object indicates the traffic class of the monitored flow. For a monitored flow carried by IPv4, this corresponds the TOS field. For a monitored flow carried by IPv6, this corresponds to the Traffic Class field.

cfmFlowIpHopLimit : Unsigned32 (0..255) <access=read-only>

// This object indicates the hop limit of the monitored flow, as observed by this device. For a monitored flow carried by IPv4, this corresponds to the TTL field. For a monitored flow carried by IPv6, this corresponds to the Hop Limit field.

}

cfmFlowIpTableChanged : TimeStamp <access=read-only>

// This object indicates the value of sysUpTime the last time the device created, modified, or destroyed a row in cfmFlowIpTable.

© 2008-2010 Cisco Systems, Inc. All rights reserved. Cisco Confidential

Monitored Flows – UDP Data

table cfmFlowUdpEntry [cfmFlowMonitorId, cfmFlowId]

{

cfmFlowUdpNext : RowPointer <access=read-only>

// This object indicates to a reference a row in another table containing additional data relating to the monitored flow.

cfmFlowUdpSrcPort : InetPortNumber <access=read-only>

// This object indicates the source UDP port of the monitored flow.

cfmFlowUdpDstPort : InetPortNumber <access=read-only>

// This object indicates the destination UDP port of the monitored flow.

}

cfmFlowUdpTableChanged : TimeStamp <access=read-only>

// This object indicates the value of sysUpTime the last time the device created, modified, or destroyed a row in cfmFlowUdpTable.

© 2008-2010 Cisco Systems, Inc. All rights reserved. Cisco Confidential

Monitored Flows – TCP Data

table cfmFlowTcpEntry [cfmFlowMonitorId, cfmFlowId]

{

cfmFlowTcpNext : RowPointer <access=read-only>

// This object indicates a reference to a row in another table containing additional data relating to the monitored flow.

cfmFlowTcpSrcPort : InetPortNumber <access=read-only>

// This object indicates the source IP port of the monitored flow.

cfmFlowTcpDstPort : InetPortNumber <access=read-only>

// This object indicates the destination IP port of the monitored flow.

}

cfmFlowTcpTableChanged : TimeStamp <access=read-only>

// This object indicates the value of sysUpTime the last time the device created, modified, or destroyed a row in cfmFlowTcpTable.

© 2008-2010 Cisco Systems, Inc. All rights reserved. Cisco Confidential

Monitored Flows – RTP Data

```
table cfmFlowRtpEntry [cfmFlowMonitorId, cfmFlowId]
{
        cfmFlowRtpNext : RowPointer <access=read-only>
            // This object indicates a reference to a row in another table containing additional data relating to the monitored flow.
        cfmFlowRtpVersion : Unsigned32 (0..3) <access=read-only>
            // This object indicates the RTP version of the monitored flow.
        cfmFlowRtpSsrc : Unsigned32 (0..4294967295) <access=read-only>
            // This object indicates the synchronized source (SSRC) of the monitored flow.
        cfmFlowRtpPayloadType : Unsigned32 (0..127) <access=read-only>
            // This object indicates the payload type of the monitored flow.
}
cfmFlowRtpTableChanged : TimeStamp <access=read-only>
        // This object indicates the value of sysUpTime the last time the device created, modified, or destroyed a row in
        cfmFlowRtpTable.
```

© 2008-2010 Cisco Systems, Inc. All rights reserved. Cisco Confidential

Monitored Flows – MPEGTS Data

table cfmFlowMpegtsEntry [cfmFlowMonitorId, cfmFlowId]

{

cfmFlowMpegtsNext : RowPointer <access=read-only>

// This object indicates a reference to a row in another table containing additional data relating to the monitored flow.

// TBD

}

cfmFlowMpegtsTableChanged : TimeStamp <access=read-only>

// This object indicates the value of sysUpTime the last time the device created, modified, or destroyed a row in cfmFlowMpegtsTable.

© 2008-2010 Cisco Systems, Inc. All rights reserved. Cisco Confidential

Extending Monitored Flow Encapsulation

- A new type of encapsulation can be represented by the CISCO-FLOW-MONITOR-MIB by taking the following steps
  - Define a table to contain the data related to the encapsulation.
    - This table must have an object descriptor of the following format: **cfmFlow**<*xxx*>**Table**, where <*xxx*> indicates the encapsulation.
  - Define an object in the table that links to the next layer of encapsulation.
    - This object must have an object descriptor of the following format: **cfmFlow**<*xxx*>**Next**.
    - This object should be the first object in the table.

© 2008-2010 Cisco Systems, Inc. All rights reserved. Cisco Confidential

Flow Metrics & Metrics History

- The **cfmFlowMetricsTable** contains data relating to data collection and metric computation for each monitored flow.

  This table serves as a base table for each set of metrics represented by the CISCO-FLOW-MONITOR-MIB and extensions of this MIB module.

  Each monitored flow has a corresponding row in this table.

- The **cfmFlowMetricsIntTable** contains a history of computed metrics for each monitored flow.

  This table serves as a base table for each set of metrics represented by the CISCO-FLOW-MONITOR-MIB and extensions of this MIB module.

  Each monitored flow has zero or more corresponding rows in this table.

  At the end of each reporting interval the corresponding flow monitor creates a new row in this table for a monitored flow. If the number of rows corresponding to a monitored flow has reached the indicated maximum, then the flow monitor first destroys the oldest corresponding row.

  Observe that the reporting interval for monitored flows does not have to be the same, even within the scope of a single flow monitor.

© 2008-2010 Cisco Systems, Inc. All rights reserved. Cisco Confidential

Flow Metrics

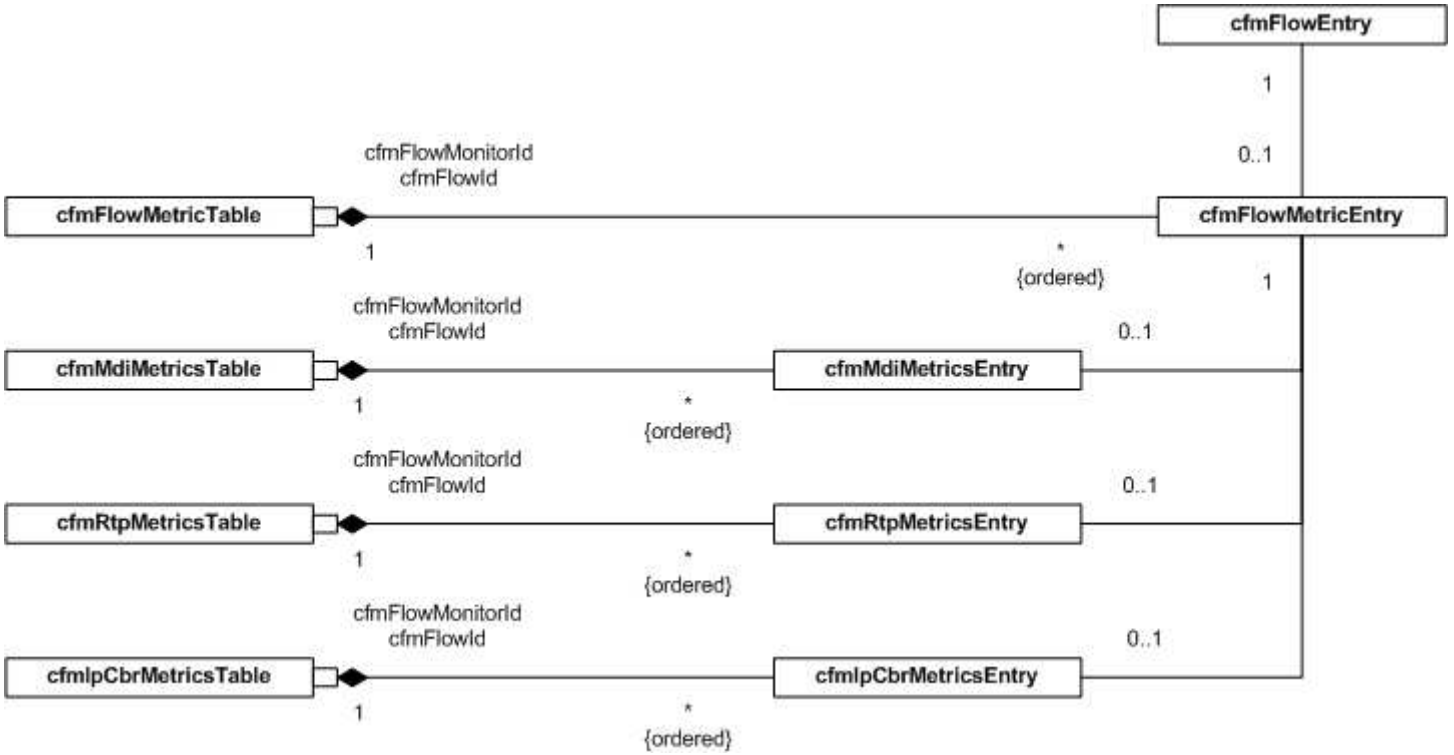

© 2008-2010 Cisco Systems, Inc. All rights reserved. Cisco Confidential

Flow Metrics History

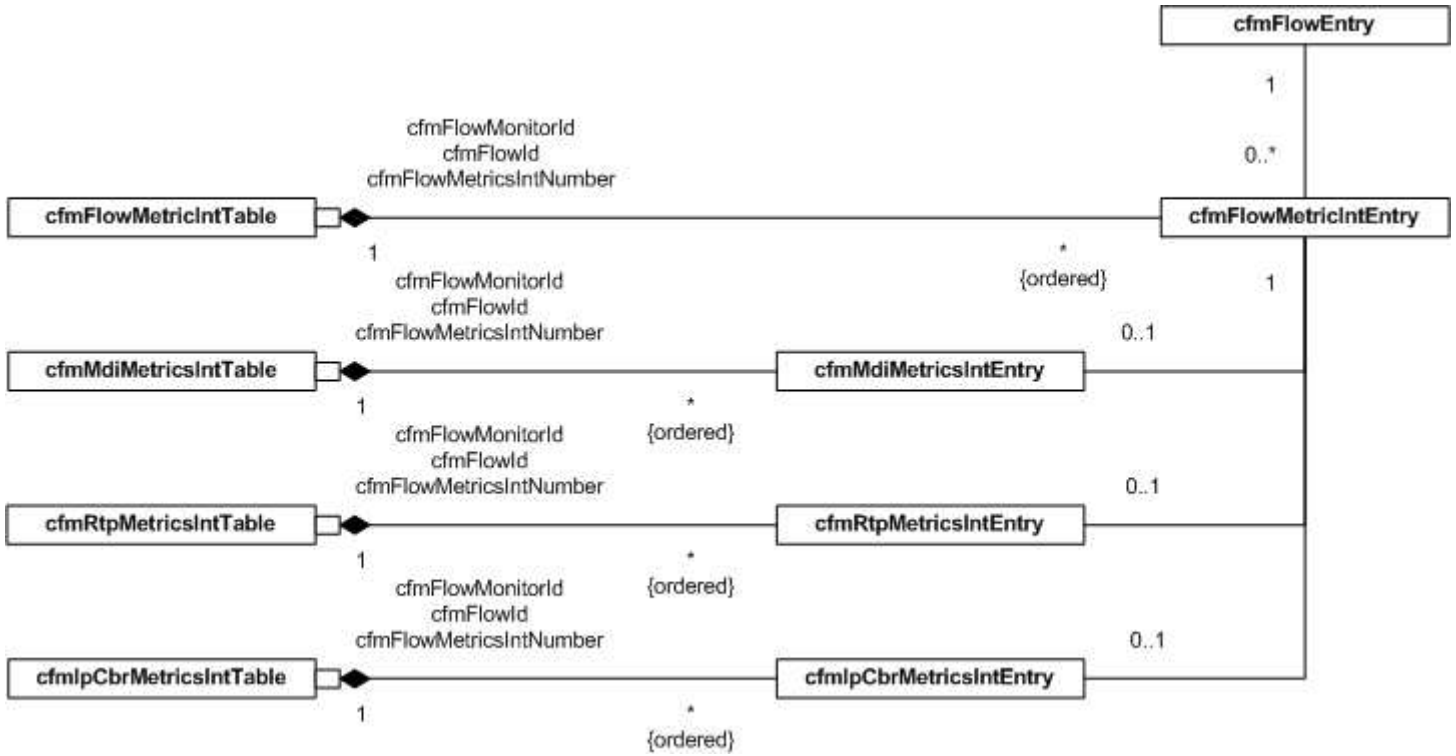

© 2008-2010 Cisco Systems, Inc. All rights reserved. Cisco Confidential

Monitored Flow Metrics

```
partial table cfmFlowMetricsEntry [cfmFlowMonitorId, cfmFlowId] {
    cfmFlowMetrics : FlowMetrics <access=read-only>
        // This object indicates the metrics computed for the monitored flow.
    cfmFlowMetricsIntervalTime : Unsigned32 (1..900) <access=read-only, units="seconds">
        // This object indicates the length of the measurement interval for the monitored flow.
    cfmFlowMetricsMaxIntervals : Unsigned32 (0..4294967295) <access=read-only, units="measurement intervals">
        // This object indicates the maximum number of measurement intervals maintained for the monitored flow.
    cfmFlowMetricsElapsedTime : Gauge32 <access=read-only, units="seconds">
        // This object indicates the time that has elapsed since the beginning of the current measurement interval.
    cfmFlowMetricsIntervals : Gauge32 <access=read-only, units="measurement intervals">
        // This object indicates the number of measurement intervals for which data has been collected.
    cfmFlowMetricsInvalidIntervals : Gauge32 <access=read-only, units="measurement interval">
        // This object indicates the number of measurement intervals in the set of collected measurement intervals that do not contain
        valid data.
    cfmFlowMetricsConditionsProfile : FlowMonitorConditionsProfile <access=read-only>
        // This object indicates the profile that describes the standing conditions monitored for the monitored flow.
    cfmFlowMetricsConditions : FlowConditions <access=read-only>
        // This object indicates the current standing conditions for the monitored flow.
    cfmFlowMetricsAlarms : FlowConditions <access=read-only>
        // This object indicates which current alarm conditions for the monitored flow.
    cfmFlowMetricsAlarmSeverity : FlowAlarmSeverity <access=read-only>
        // This object indicates the highest severity alarm currently raised for the monitored flow.
}
cfmFlowMetricsTableChanged : TimeStamp <access=read-only>
    // This object indicates the value of sysUpTime the last time the device created/destroyed a row in the cfmFlowMetricsTable.
```

© 2008-2010 Cisco Systems, Inc. All rights reserved. Cisco Confidential

Monitored Flow Metrics (cont.)

```
partial table cfmFlowMetricsEntry [cfmFlowMonitorId, cfmFlowId] {
    cfmFlowMetricsPkts : Counter64 <access=read-only, units="packets">
        // This object indicates the number of packets the corresponding flow monitor has processed for this monitored flow.
    cfmFlowMetricsOctets : Counter64 <access=read-only, units="octets">
        // This object indicates the number of octets the corresponding flow monitor has processed for this monitored flow.
    cfmFlowMetricsBitRateUnits : FlowBitRateUnits <access=read-only>
        // This object indicates the units for the corresponding instance of cfmFlowMetricsBitRate.
    cfmFlowMetricsBitRate : Gauge32 <access=read-only>
        // This object indicates the bit rate at which the corresponding flow monitor is processing packets for this monitored flow.
    cfmFlowMetricsPktRate : Gauge32 <access=read-only>
        // This object indicates the packet rate at which the corresponding flow monitor is processing packets for this monitored flow.
}
```

© 2008-2010 Cisco Systems, Inc. All rights reserved. Cisco Confidential

Monitored Flow Metrics History

table cfmFlowMetricsIntEntry [cfmFlowMonitorId, cfmFlowId, cfmFlowMetricsIntNumber] {

cfmFlowMetricsIntNumber : Unsigned32 (1..4294967295) <access=not-accessible>

// This object indicates the interval number identifying the measurement interval. The measurement interval identified by the value '1' represents the most recent measurement interval, and the interval identified by the value (n) represents the interval immediately preceding the interval identified by the value (n-1).

cfmFlowMetricsIntValid : TruthValue <access=read-only>

// This object indicates whether the data for the measurement interval is valid.

cfmFlowMetricsIntTime : TimeStamp <access=read-only>

// This object indicates the value of sysUpTime when the measurement interval was captured.

cfmFlowMetricsIntConditions : FlowConditions <access=read-only>

// This object indicates which conditions were asserted at least once during the measurement interval.

cfmFlowMetricsIntPkts : ReportIntervalCount <access=read-only, units="packets">

// This object indicates the number of packets the corresponding flow monitor processed for the monitored flow during the measurement interval.

cfmFlowMetricsIntOctets : ReportIntervalCount <access=read-only, units="octets">

// This object indicates the number of octets the corresponding flow monitor processed for the monitored flow during the measurement interval.

cfmFlowMetricsIntBitRateUnits : FlowBitRateUnits <access=read-only>

// This object indicates the units for the corresponding instance of cfmFlowMetricsIntBitRate.

cfmFlowMetricsIntBitRate : ReportIntervalCount <access=read-only>

// This object indicates the bit rate at which the corresponding flow monitor processed packets for the monitored flow during the measurement interval.

cfmFlowMetricsIntPktRate : ReportIntervalCount <access=read-only>

// This object indicates the packet rate at which the corresponding flow monitor processed packets for the monitored flow during the measurement interval.

}

© 2008-2010 Cisco Systems, Inc. All rights reserved. Cisco Confidential

MDI Metrics

table cfmMdiMetricsEntry [cfmFlowMonitorId, cfmFlowId]

{

cfmMdiMetricsCfgRateType : FlowCfgRateType <access=read-only>

// This object indicates the how the corresponding flow monitor computes the DF for the monitored flow.

cfmMdiMetricsCfgBitRate : FlowBitRateUnits <access=read-only>

// This object indicates the units for the corresponding instance of cfmMdiMetricsCfgRate. The value of this column only has relevance if the corresponding instance of cfmMdiMetricsCfgRateType is ‘ipBitRate’ or ‘mediaBitRate’.

cfmMdiMetricsCfgRate : Unsigned32 (1..4294967295) <access=read-only>

// This object indicates the configured bit rate used by the flow monitor. The value of this column only has relevance if the corresponding instance of cfmMdiMetricsCfgRateType is ‘ipBitRate’ or ‘mediaBitRate’.

cfmMdiMetricsCfgMediaPktSize : Unsigned32 (64..65535) <access=read-only, units=octets>

// This object indicates the configured media packet size used by the flow monitor to compute DF. The value of this column only has relevance if the corresponding instance of cfmMdiMetricsCfgRateType is ‘mediaBitRate’.

cfmMdiMetricsValid : BITS { ‘lostPkts’, ‘mediaLossRate’ } <access=read-only>

// This object indicates which metrics are valid.

cfmMdiMetricsLostPkts : Counter64 <access=read-only, units=packets>

// This object indicates the number of packets lost for the monitored flow.

cfmMdiMetricsMlrScale : FlowMetricScale <access=read-only>

// This object indicates the scale factor for the corresponding instance of cfmMdiMetricsMlr.

cfmMdiMetricsMlrPrecision : FlowMetricPrecision <access=read-only>

// This object indicates the precision for the corresponding instance of cfmMdiMetricsMlr.

cfmMdiMetricsMlr : FlowMetricValue <access=read-only, units=“packets/second”>

// This object indicates the Media Loss Rate (MLR) for the monitored flow since the flow monitor started collecting data for the monitored flow.

}

© 2008-2010 Cisco Systems, Inc. All rights reserved. Cisco Confidential

MDI Metrics History

partial table cfmMdiMetricsIntEntry [cfmFlowMonitorId, cfmFlowId, cfmFlowMetricsIntNumber]

{

cfmMdiMetricsIntValid : BITS { ‘lostPkts’, ‘vbMin’, ‘vbMax’, ‘mediaRate’, ‘delayFactor’, ‘mediaLossRate’ } <access=read-only>

// This object indicates which metrics are valid.

cfmMdiMetricsIntLostPkts : ReportIntervalCount <access=read-only, units=“packets”>

// This object indicates the number of lost packets for the monitored flow during the last measurement interval.

cfmMdiMetricsIntVbMin : ReportIntervalCount <access=read-only, units=“bytes”>

// This object indicates the minimum virtual buffer size computed for the monitored flow over the course of the measurement interval.

cfmMdiMetricsIntVbMax : ReportIntervalCount <access=read-only, units=“bytes”>

// This object indicates the maximum virtual buffer size computed for the monitored flow over the course of the measurement interval.

cfmMdiMetricsIntMrUnits : FlowBitRateUnits <access=read-only>

// This object indicates the units for the corresponding instance of cfmMdiMetricsIntMr.

cfmMdiMetricsIntMr : ReportIntervalCount <access=read-only>

// This object indicates the media rate used by the flow monitor to compute the delay factor. If the corresponding instance of cfmMdiMetricsCfgRateType is ‘auto’, then the value of this column indicates the measured MR. Otherwise, the value of this column reflects the configured MR.

cfmMdiMetricsIntDfScale : FlowMetricScale <access=read-only>

// This object indicates the scaling factor for the corresponding instance of cfmMdiMetricsIntDf.

cfmMdiMetricsIntDfPrecision : FlowMetricPrecision <access=read-only>

// This object indicates the precision of the corresponding instance of cfmMdiMetricsIntDf.

cfmMdiMetricsIntDf : FlowMetricValue <access=read-only, units=“milliseconds”>

// This object indicates the delay factor for the monitored flow during the measurement interval.

}

© 2008-2010 Cisco Systems, Inc. All rights reserved. Cisco Confidential

MDI Metrics History (cont.)

```
partial table cfmMdiMetricsIntEntry [cfmFlowMonitorId, cfmFlowId, cfmFlowMetricsIntNumber]
{
        cfmMdiMetricsIntMlrScale : FlowMetricScale <access=read-only>
            // This object indicates the scaling factor for the corresponding instance of cfmMdiMetricsIntMLR.
        cfmMdiMetricsIntMlrPrecision : FlowMetricPrecision <access=read-only>
            // This object indicates the precision for the corresponding instance of cfmMdiMetricsIntMLR.
        cfmMdiMetricsIntMlr : FlowMetricValue <access=read-only, units="packets/second">
            // This object indicates the Media Loss Rate (MLR) for the monitored flow during the measurement interval.
}
```

© 2008-2010 Cisco Systems, Inc. All rights reserved. Cisco Confidential

RTP Metrics

```
partial table cfmRtpMetricsEntry [cfmFlowMonitorId, cfmFlowId]
{
        cfmRtpMetricsValid : BITS {
            'expectedPkts', 'lostPkts', 'lossFraction', 'lossIntervals', 'avgLossIntervalDuration', 'avgLossDistance', 'jitter' }
            <access=read-only>
              // This object indicates which metrics are valid.
        cfmRtpMetricsExpectedPkts : Counter64 <access=read-only, units="packets">
              // This object indicates the number of packets expected for the monitored flow.
        cfmRtpMetricsLostPkts : Counter64 <access=read-only, units="packets">
              // This object indicates the number of packets lost for the monitored flow.
        cfmRtpMetricsFracScale : FlowMetricScale <access=read-only>
              // This object indicates the scaling factor for the corresponding instance of cfmRtpMetricsFrac.
        cfmRtpMetricsFracPrecision : FlowMetricPrecision <access=read-only>
              // This object indicates the precision for the corresponding instance of cfmRtpMetricsFrac.
        cfmRtpMetricsFrac : FlowMetricValue <access-read-only>
              // This object indicates the loss fraction for the monitored flow.
        cfmRtpMetricsLIs : Counter64 <access=read-only, units="intervals">
              // This object indicates the number of loss intervals observed by the corresponding flow monitor for the monitored flow. A
              loss interval represents an interval of time when consecutive RTP packets were lost.
              // Consider the following sequence of packets: 20, 21, 25, 26, 27.
              // The interval between packets 21 and 25 represents a "loss interval".
}
```

© 2008-2010 Cisco Systems, Inc. All rights reserved. Cisco Confidential

RTP Metrics (cont.)

partial table cfmRtpMetricsEntry [cfmFlowMonitorId, cfmFlowId]

{

cfmRtpMetricsAvgLIScale : FlowMetricScale <access=read-only>

// This object indicates the scaling factor for the corresponding instance of cfmRtpMetricsAvgLossInt.

cfmRtpMetricsAvgLIPrecision : FlowMetricPrecision <access=read-only>

// This object indicates the precision for the corresponding instance of cfmRtpMetricsAvgLossInt.

cfmRtpMetricsAvgLI : FlowMetricValue <access=read-only, units="packets/interval">

// This object indicates the average number of packets lost per loss interval for the monitored flow.

cfmRtpMetricsAvgLossDistance : Gauge32 <access=read-only>

// This object indicates the average loss distance observed for the monitored flow. Loss distance represents the difference in the sequence numbers of the missing packets from the start of two consecutive loss intervals.

cfmRtpMetricsJitterScale : FlowMetricScale <access=read-only>

// This object indicates the scaling factor for the corresponding instance of cfmRtpMetricsJitter.

cfmRtpMetricsJitterPrecision : FlowMetricPrecision <access=read-only>

// This object indicates the precision for the corresponding instance of cfmRtpMetricsJitter.

cfmRtpMetricsJitter : FlowMetricValue <access=read-only, units="seconds">

// This object indicates the inter-arrival jitter for the monitored flow.

}

© 2008-2010 Cisco Systems, Inc. All rights reserved. Cisco Confidential

RTP Metrics History

```
partial table cfmRtpMetricsIntEntry [cfmFlowMonitorId, cfmFlowId, cfmFlowMetricsIntNumber]
{
        cfmRtpMetricsIntValid : BITS {
            'expectedPkts', 'lostPkts', 'lossFraction', 'lossIntervals', 'avgLossIntervalDuration', 'avgLossDistance', 'maxJitter',
            'maxMinTransit'}  <access=read-only>
              // This object indicates which metrics are valid.
        cfmRtpMetricsIntExpectedPkts : ReportIntervalCount <access=read-only>
              // This object indicates the number of packets expected for the monitored flow during the measurement interval.
        cfmRtpMetricsIntLostPkts : ReportIntervalCount <access=read-only, units="packets">
              // This object indicates the number of packets lost for the monitored flow during the measurement interval.
        cfmRtpMetricsIntFracScale : FlowMetricScale <access=read-only>
              // This object indicates the scaling factor for the corresponding instance of cfmRtpMetricsIntFrac.
        cfmRtpMetricsIntFracPrecision : FlowMetricPrecision <access=read-only>
              // This object indicates the precision for the corresponding instance of cfmRtpMetricsIntFrac.
        cfmRtpMetricsIntFrac : FlowMetricValue <access-read-only>
              // This object indicates the loss fraction for the monitored flow during the measurement interval.
}
```

© 2008-2010 Cisco Systems, Inc. All rights reserved. Cisco Confidential

RTP Metrics History

partial table cfmRtpMetricsIntEntry [cfmFlowMonitorId, cfmFlowId, cfmFlowMetricsIntNumber]

{

cfmRtpMetricsIntLIs : ReportIntervalCount <access=read-only, units="intervals">

// This object indicates the number of loss intervals observed by the corresponding flow monitor for the monitored flow during the measurement interval. A loss interval represents an interval of time when consecutive RTP packets were lost.

// Consider the following sequence of packets: 20, 21, 25, 26, 27.

// The interval between packets 21 and 25 represents a "loss interval".

cfmRtpMetricsIntAvgLIScale : FlowMetricScale <access=read-only>

// This object indicates the scaling factor for the corresponding instance of cfmRtpMetricsAvgLI.

cfmRtpMetricsIntAvgLIPrecision : FlowMetricPrecision <access=read-only>

// This object indicates the precision for the corresponding instance of cfmRtpMetricsAvgLI.

cfmRtpMetricsIntAvgLI : FlowMetricValue <access=read-only, units="packets/interval">

// This object indicates the average number of packets lost per loss interval for the monitored flow during the measurement interval.

}

© 2008-2010 Cisco Systems, Inc. All rights reserved. Cisco Confidential

RTP Metrics History (cont.)

partial table cfmRtpMetricsIntEntry [cfmFlowMonitorId, cfmFlowId, cfmFlowMetricsIntNumber]

{

cfmRtpMetricsIntAvgLossDistance : ReportIntervalCount <access=read-only>

// This object indicates the average loss distance observed for the monitored flow during the measurement interval. Loss distance represents the difference in the sequence numbers of the missing packets from the start of two consecutive loss intervals.

cfmRtpMetricsIntJitterScale : FlowMetricScale <access=read-only>

// This object indicates the scaling factor for the corresponding instance of cfmRtpMetricsIntJitter.

cfmRtpMetricsIntJitterPrecision : FlowMetricPrecision <access=read-only>

// This object indicates the precision for the corresponding instance of cfmRtpMetricsIntJitter.

cfmRtpMetricsIntJitter : FlowMetricValue <access=read-only, units="seconds">

// This object indicates the inter-arrival jitter for the monitored flow during the measurement interval.

cfmRtpMetricsIntTransitScale : FlowMetricScale <access=read-only>

// This object indicates the scaling factor for the corresponding instance of cfmRtpMetricsIntTransit.

cfmRtpMetricsIntTransitPrecision : FlowMetricPrecision <access=read-only>

// This object indicates the precision for the corresponding instance of cfmRtpMetricsIntTransit.

cfmRtpMetricsIntTransit : FlowMetricValue <access=read-only, units="seconds">

// This object indicates the difference between the maximum and minimum transit time for a packet over the measurement interval. In this context, the transit time refers to the latency from insertion in the network to the device and not transit time through the device. The flow monitor computes this value from the RTP timestamp contained by the packets received from the monitored flow.

}

© 2008-2010 Cisco Systems, Inc. All rights reserved. Cisco Confidential

IP-CBR Metrics

table cfmIpCbrMetricsEntry [cfmFlowMonitorId, cfmFlowId]

{

cfmIpCbrMetricsCfgRateType : FlowCfgRateType <access=read-only>

// This object indicates the how the corresponding flow monitor computes the DF for the monitored flow.

cfmIpCbrMetricsCfgBitRate : FlowBitRateUnits <access=read-only>

// This object indicates the units for the corresponding instance of cfmIpCbrMetricsCfgRate. The value of this column only has relevance if the corresponding instance of cfmIpCbrMetricsCfgRateType is ‘ipBitRate’ or ‘mediaBitRate’.

cfmIpCbrMetricsCfgRate : Unsigned32 (1..4294967295) <access=read-only>

// This object indicates the configured bit rate used by the flow monitor. The value of this column only has relevance if the corresponding instance of cfmIpCbrMetricsCfgRateType is ‘ipBitRate’ or ‘mediaBitRate’.

cfmIpCbrMetricsCfgMediaPktSize : Unsigned32 (1..65535) <access=read-only, units=octets>

// This object indicates the configured media packet size used by the flow monitor to compute DF. The value of this column only has relevance if the corresponding instance of cfmIpCbrMetricsCfgRateType is ‘mediaBitRate’.

cfmIpCbrMetricsValid : BITS { ‘lostPkts’, ‘mediaRateVariation’ } <access=read-only>

// This object indicates which metrics are valid.

cfmIpCbrMetricsLostPkts : Counter64 <access=read-only, units=packets>

// This object indicates the number of packets lost for the monitored flow.

cfmIpCbrMetricsMrvScale : FlowMetricScale <access=read-only>

// This object indicates the scale factor for the corresponding instance of cfmIpCbrMetricsMrv.

cfmIpCbrMetricsMrvPrecision : FlowMetricPrecision <access=read-only>

// This object indicates the precision for the corresponding instance of cfmIpCbrMetricsMrv.

cfmIpCbrMetricsMrv : FlowMetricValue <access=read-only>

// This object indicates the Media Rate Variance (MRV) for the monitored flow since the flow monitor started collecting data for the monitored flow.

}

© 2008-2010 Cisco Systems, Inc. All rights reserved. Cisco Confidential

IP-CBR Metrics History

partial table cfmIpCbrMetricsIntEntry [cfmFlowMonitorId, cfmFlowId, cfmFlowMetricsIntNumber]

{

cfmIpCbrMetricsIntValid : BITS { ‘lostPkts’ ‘vbMin’, ‘vbMax’, ‘mediaRate’, ‘delayFactor’, ‘mediaRateVariation’ } <access=read-only>

// This object indicates which metrics are valid.

cfmIpCbrMetricsIntLostPkts : ReportIntervalCount <access=read-only, units=“packets”>

// This object indicates the number of packets lost for the monitored flow during the last measurement interval.

cfmIpCbrMetricsIntVbMin : ReportIntervalCount <access=read-only, units=“bytes”>

// This object indicates the minimum virtual buffer size computed for the monitored flow over the course of the measurement interval.

cfmIpCbrMetricsIntVbMax : ReportIntervalCount <access=read-only, units=“bytes”>

// This object indicates the maximum virtual buffer size computed for the monitored flow over the course of the measurement interval.

cfmIpCbrMetricsIntMrUnits : FlowBitRateUnits <access=read-only>

// This object indicates the units for the corresponding instance of cfmIpCbrMetricsIntMr.

cfmIpCbrMetricsIntMr : ReportIntervalCount <access=read-only>

// This object indicates the media rate used by the flow monitor to compute the delay factor. If the corresponding instance of cfmIpCbrMetricsCfgRateType is ‘auto’, then the value of this column indicates the measured MR. Otherwise, the value of this column reflects the configured MR.

cfmIpCbrMetricsIntDfScale : FlowMetricScale <access=read-only>

// This object indicates the scaling factor for the corresponding instance of cfmIpCbrMetricsIntDf.

cfmIpCbrMetricsIntDfPrecision : FlowMetricPrecision <access=read-only>

// This object indicates the precision of the corresponding instance of cfmIpCbrMetricsIntDf.

cfmIpCbrMetricsIntDf : FlowMetricValue <access=read-only, units=“milliseconds”>

// This object indicates the delay factor for the monitored flow during the measurement interval.

}

© 2008-2010 Cisco Systems, Inc. All rights reserved. Cisco Confidential

IP-CBR Metrics History (cont.)

```
partial table cfmIpCbrMetricsIntEntry [cfmFlowMonitorId, cfmFlowId, cfmFlowMetricsIntNumber]
{
        cfmIpCbrMetricsIntMrvScale : FlowMetricScale <access=read-only>
            // This object indicates the scaling factor for the corresponding instance of cfmIpCbrMetricsIntMrv.
        cfmIpCbrMetricsIntMrvPrecision : FlowMetricPrecision <access=read-only>
            // This object indicates the precision for the corresponding instance of cfmIpCbrMetricsIntMrv.
        cfmIpCbrMetricsIntMrv : FlowMetricValue <access=read-only, units="packets/second">
            // This object indicates the Media Rate Variance (MRV) for the monitored flow during the measurement interval.
}
```

© 2008-2010 Cisco Systems, Inc. All rights reserved. Cisco Confidential

Extending Monitored Flow Metrics

- A new set of metrics can be represented by the by taking the following steps:

  Add a value to the FlowMetrics textual convention describing the set of metrics.

  Define a new MIB module with the name CISCO-<type>-METRICS-MIB, where <type> represents the set metrics (e.g., “MPEGTS”).

  Define a table extending the **cfmFlowMetricsTable**.

    This table must have an object descriptor of the following format: **cfm**<*xxx*>**MetricsTable**, where <*xxx*> is a mnemonic representing the set of metrics (e.g., “mpegts”)

    This table has a sparse dependent relationship on the **cfmFlowMetricsTable**, containing a row for each row in the **cfmFlowMetricsTable** having a **cfmFlowMetrics** indicating the new bit added in the first step.

  Define a table extending the **cfmFlowMetricsIntTable**.

    This table must have an object descriptor of the following format: **cfm**<xxx>**MetricsIntTable**.

    This table has an expansion dependent relationship sparse dependent relationship on the **cfmFlowMetricsIntTable**, containing a row for each row in the **cfmFlowMetricsIntTable** having a corresponding **cfmFlowMetrics** indicating the new bit added in the first step.

© 2008-2010 Cisco Systems, Inc. All rights reserved. Cisco Confidential

Fault Monitoring

- The CISCO-FLOW-MONITOR-MIB defines objects and notifications that a device may employ to indicate a standing and alarm conditions.
- However, the CISCO-FLOW-MONITOR-MIB does **NOT** define objects that describe the corresponding configuration for alarm and event monitoring.

  The primary reason for this concerns the issue of scalability; specifically, per flow configuration is hardly practical from the perspective of the EMS/NMS.

  This leaves the door open for a variety of methods for applying threshold configuration to a flow, including templates (or profiles), class-based policies (including policies pushed from an external policy server), and even automatic mechanisms (e.g., IP SLA).

  This also brings us back to a reason stated in an earlier slide: “The configuration of a video data analyzer or a video monitoring feature varies enough between equipment and vendors that any attempt to standardize this would be futile, at this time.”
- The following slide illustrates the UML model describing the data relating to fault monitoring.

© 2008-2010 Cisco Systems, Inc. All rights reserved. Cisco Confidential

Fault Monitoring (cont.)

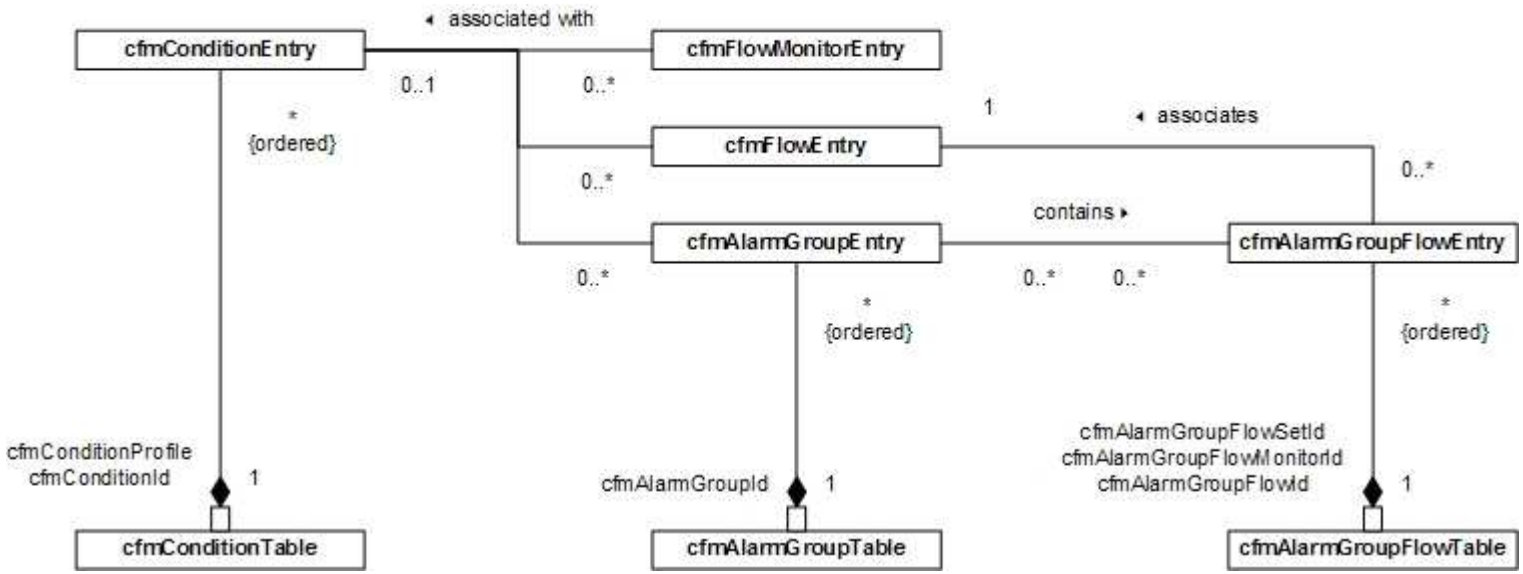

© 2008-2010 Cisco Systems, Inc. All rights reserved. Cisco Confidential

Standing Conditions

- An standing condition represents a lasting error, fault, or warning, resulting from the application of a set of criteria to the state of a flow monitor or a monitored flow.
- The CISCO-FLOW-MONITOR-MIB defines objects describing standing conditions relating to flow monitors and monitored flows.
- In addition, the CISCO-FLOW-MONITOR-MIB maintains a history of those standing conditions asserted by each flow during each measurement interval.
- Objects defined by the CISCO-FLOW-MONITOR-MIB describing standing conditions use the **FlowMonitorConditions** textual convention.

  This textual convention denotes uses an octet string-value, where each bit corresponds to the state of an a corresponding standing condition.

© 2008-2010 Cisco Systems, Inc. All rights reserved. Cisco Confidential

Condition Profiles

- The **cfmConditionTable** describes the standing conditions monitored by the device.
- This table groups standing conditions into condition profiles.
- A condition profile uniquely identifies each standing condition it contains by a condition identifier.
- The condition identifier corresponds to the bit position in an object using the **FlowMonitorCondition** textual convention.
- The standing conditions monitored for an entity, such as a flow monitor or a monitored flow, must be contained by a single condition profile.

© 2008-2010 Cisco Systems, Inc. All rights reserved. Cisco Confidential

Standing Conditions for Flow Monitors

- An instance of **cfmFlowMonitorConditionsProfile** indicates the condition profile (i.e. the set of rows in the **cfmConditionTable**) that describes each standing condition monitored for the flow monitor.
- An instance of **cfmFlowMonitorConditions** describes the current state of the standing conditions for the flow monitor.
- A bit describing a standing condition has a corresponding row in the **cfmConditionTable**, which provides a full description of the standing condition.

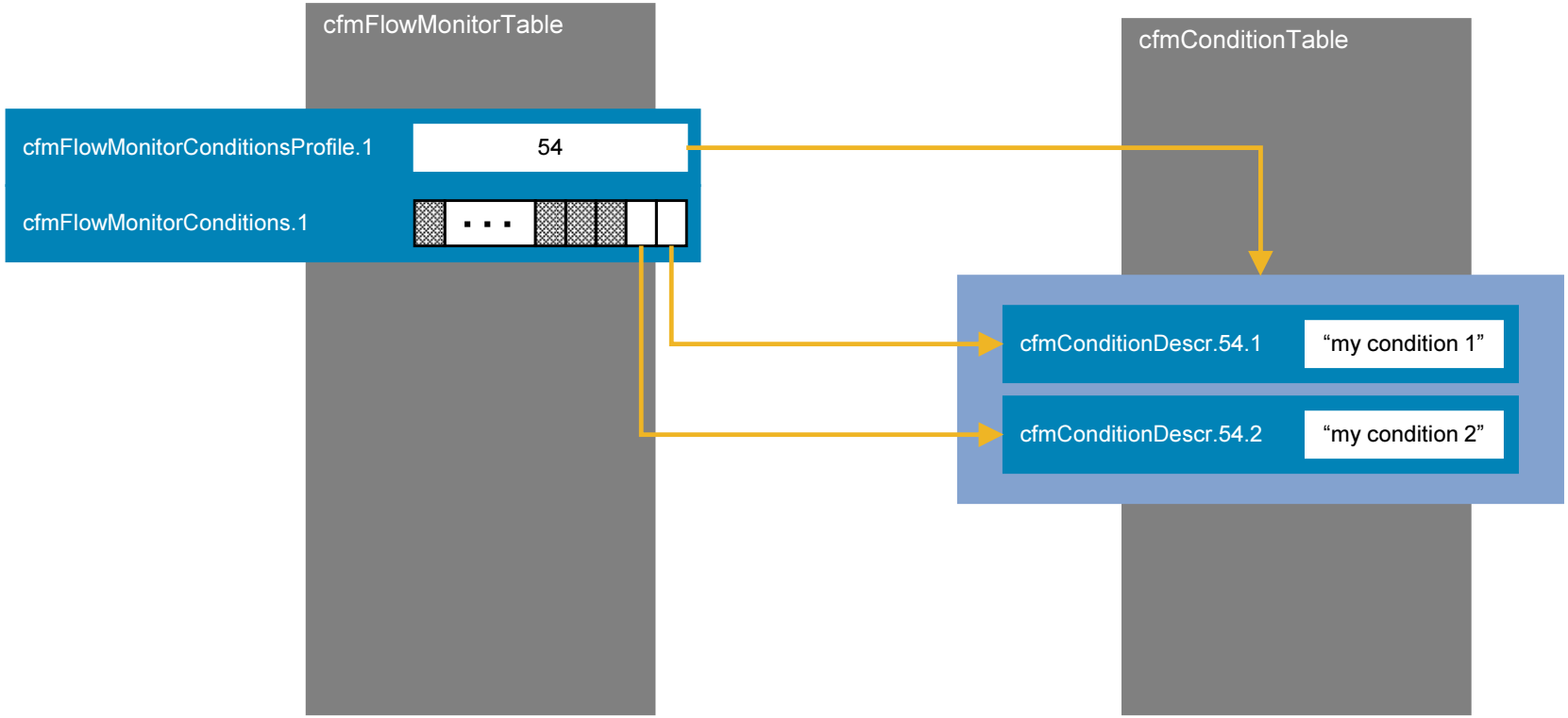

© 2008-2010 Cisco Systems, Inc. All rights reserved. Cisco Confidential

Standing Conditions for Monitored Flows

- An instance of **cfmFlowMetricsConditionsProfile** indicates the condition profiles (i.e., the set of rows in the **cfmConditionTable**) that describes each standing condition monitored for the corresponding monitored flow.
- An instance of **cfmFlowMetricsConditions** describes the current state of the standing conditions for a corresponding monitored flow.
- A bit describing a standing condition has a corresponding row in the **cfmConditionTable**, which provides a full description of the standing condition.

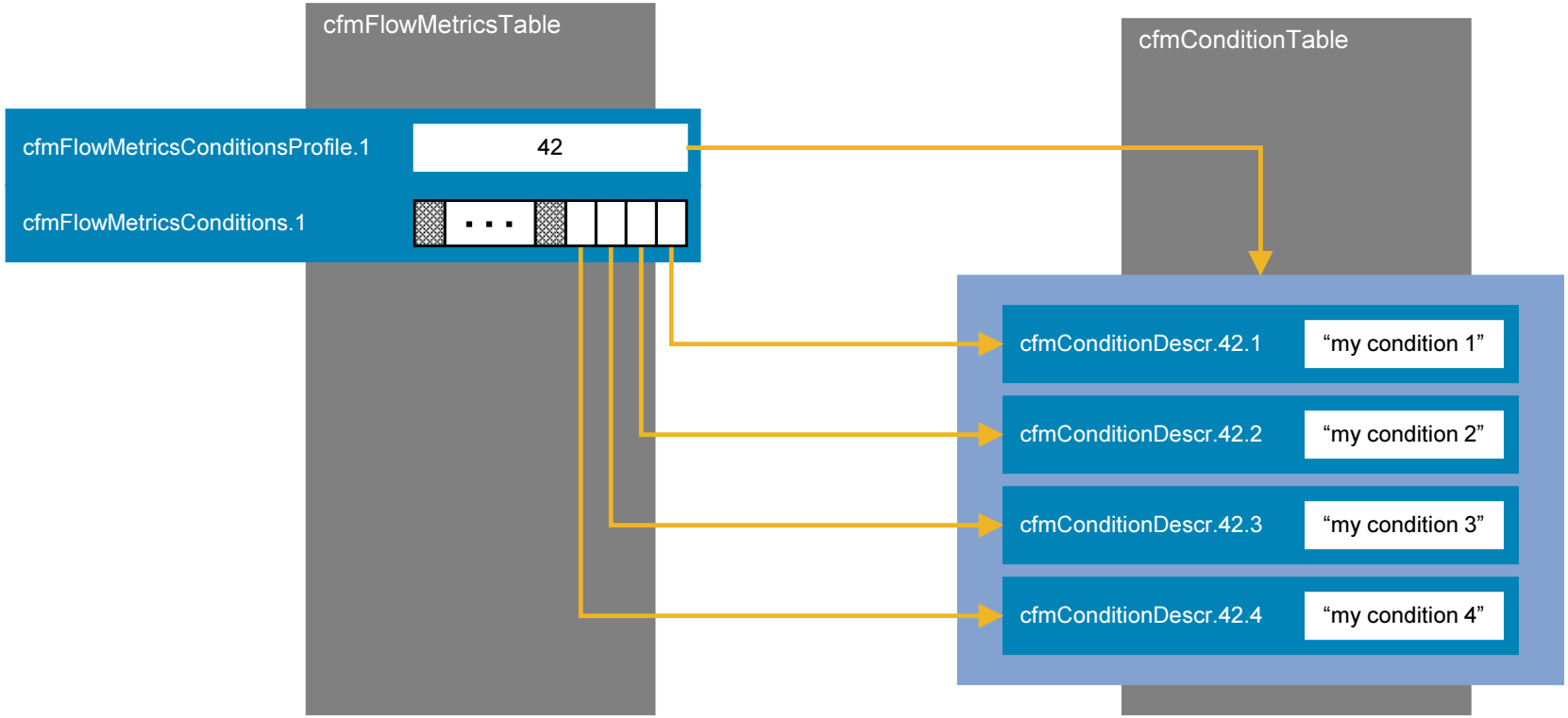

© 2008-2010 Cisco Systems, Inc. All rights reserved. Cisco Confidential

Standing Conditions

```
partial table cfmConditionTable [cfmConditionProfile, cfmConditionId]
{
        cfmConditionProfile : FlowMonitorConditionsProfile <access=not-accessible>
            // This object uniquely identifies the profile that describes one or more standing condition.
        cfmConditionId : FlowMonitorConditionIdentifier <access=not-accessible>
            // This object indicates the standing condition described by this row.
        cfmConditionDescr : SnmpAdminString <access=read-only>
            // This object indicates a human-readable description of the standing condition.
        cfmConditionMonitoredElement : AutonomousType <access=read-only>
            // This object indicates the monitored element used in determining the state of the standing condition
        cfmConditionType : INTEGER { other, boolean, risingThreshold, fallingThreshold, risingAndFallingThreshold }
            // This object indicates the type of standing condition.
        cfmConditionThreshRiseScale : FlowMetricScale <access=read-only>
            // This object indicates the scaling factor for the corresponding instance of cfmConditionThreshRise.
        cfmConditionThreshRisePrecision : FlowMetricPrecision <access=read-only>
            // This object indicates the precision for the corresponding instance of cfmConditionThreshRise.
        cfmConditionThreshRise : Integer32 (-1000000000..1000000000) <access=read-only>
            // This object indicates the value of the rising threshold. This column only has relevance if the corresponding instance of
            cfmScdType is 'risingThreshold' or 'risingAndFallingThreshold'.
        cfmConditionThreshFallScale : FlowMetricScale <access=read-only>
            // This object indicates the scaling factor for the corresponding instance of cfmConditionThreshFall.
        cfmConditionThreshFallRise : FlowMetricPrecision <access=read-only>
            // This object indicates the precision for the corresponding instance of cfmConditionThreshFall.
        cfmConditionThreshFall : Unsigned32 (-1000000000..1000000000) <access=read-only>
            // This object indicates the value of the falling threshold. This column only has relevance if the corresponding instance of
            cfmScdType is 'fallingThreshold' or 'risingAndFallingThreshold'.
}
```

© 2008-2010 Cisco Systems, Inc. All rights reserved. Cisco Confidential

Standing Conditions (cont.)

```
partial table cfmConditionTable [cfmConditionProfile, cfmConditionMonitoredElement]
{
        cfmConditionSampleType : INTEGER { other, raw, averaged } <access=read-only>
                // This object indicates the sampling algorithm used by the flow monitor when applying the standing condition.
        cfmConditionSampleWindow : Unsigned32 (0..4294967295) <access=read-only>
                // This object indicates the sampling window used by the flow monitor when applying the standing condition. This column
                only has relevance if the corresponding instance of cfmScdSampleType is 'averaged'.
        cfmConditionAlarm : INTEGER { none, discrete, grouped }
                // This object indicates whether the device treats the standing condition as an alarm condition:
                //      'none' – the device does not treat the standing condition as an alarm condition.
                //      'discrete' – the device treats the standing condition as an alarm condition.
                //      'grouped' – the device aggregates the standing condition into an alarm group.
        cfmConditionAlarmActions : BITS { log, syslog, snmp }
                // This object indicates the actions taken by the device when the alarm condition changes state:
                //      'log' – the device logs the event.
                //      'syslog' – the device generates a syslog message.
                //      'snmp' – the device generates a cfmNotifyAlarm notification.
                // The value of this column only has relevance if the corresponding instance of cfmConditionAlarm is 'discrete'.
        cfmConditionAlarmSeverity : CiscoAlarmSeverity <access=not-accessible>
                // This object indicates the severity of the alarm condition. The value of this column only has relevance if the corresponding
                instance of cfmConditionAlarm is 'discrete'.
        cfmConditionAlarmGroup : FlowMonitorAlarmGroupIdentifier <access=read-only>
                // This object indicates the associated alarm group. The value of this column only has relevance if the corresponding
                instance of cfmConditionAlarm is 'grouped'.
}
```

© 2008-2010 Cisco Systems, Inc. All rights reserved. Cisco Confidential

Monitored Elements

- A monitored element indicates the state that a standing condition applies.

  This can be any operational status, including a flag, a statistics, or metric.

- A standing condition indicates the monitored element that it applies through cfmConditionMonitoredElement.

  This object use the AutonomousType textual convention, which represents an extensible type identification value.

- The CISCO-FLOW-MONITOR-MIB and other metric-specific MIB modules define identifiers representing monitored elements.

  Each MIB module defines identifiers using OBJECT-IDENTITY statements.

  Each MIB module defines identifiers relating to the MIB. For example, the CISCO-RTP-METRICS-MIB defines identifiers representing monitored elements relating to the RTP (e.g., RTP loss fraction).

© 2008-2010 Cisco Systems, Inc. All rights reserved. Cisco Confidential

Common Monitored Elements

- **cfmeOther**

  Represents an unrecognized monitored element.
- **cfmeFlowCount**

  Represents the number of monitored flows maintained by a flow monitor (cfmFlowMonitorFlowCount).
- **cfmeFlowTimeouts**

  Represents the number of monitored flows that expired during the last measurement interval.
- **cfmeFlowStop**

  Represents the condition that arises when a flow monitor does not receive any packets for a monitored flow during the last measurement interval.
- **cfmeFlowCumulativeBitRate**

  Represents the average rate at which a flow monitor processes bits contained by packets for a monitored flow (cfmFlowMetricsBitRate).
- **cfmeFlowCumulativePktRate**

  Represents the average rate at which a flow monitor processes packets for a monitored flow (cfmFlowMetricsPktRate).
- **cfmeFlowBitRate**

  Represents the average rate at which a flow monitor processes bits contained by packets for a monitored flow during the last measurement interval (cfmFlowMetricsIntBitRate).
- **cfmeFlowPktRate**

  Represents the average rate at which a flow monitor processes packets for a monitored flow during the last measurement interval (cfmFlowMetricsIntPktRate).

© 2008-2010 Cisco Systems, Inc. All rights reserved. Cisco Confidential

MDI Monitored Elements

- **cfmeMdiCumulativeLostPkts**

  Represents the cumulative number of lost packets for a monitored flow (cfmMdiMetricsLostPkts).

- **cfmeMdiCumulativeMlr**

  Represents the MDI MLR for a monitored flow (cfmMdiMetricsMlr).

- **cfmeMdiLostPkts**

  Represents the number of lost packets for a monitored flow during the last measurement interval (cfmMdiMetricsIntLostPkts).

- **cfmeMdiDf**

  Represents the MDI DF for the monitored flow during the last measurement interval (cfmMdiMetricsIntDf).

- **cfmeMdiMlr**

  Represents the MDI MLR for the monitored flow during the last measurement interval (cfmMdiMetricsIntMlr).

© 2008-2010 Cisco Systems, Inc. All rights reserved. Cisco Confidential

RTP Monitored Elements

- **cfmeRtpSsrcMismatch**

  Represents the condition that arises when a flow monitor detects a RTP SSRC mismatch for a monitored flow during the last measurement interval.

- **cfmeRtpCumulativeLostPkts**

  Represents the cumulative number of lost RTP data packets for a monitored flow (cfmRtpMetricsLostPkts).

- **cfmeRtpCumulativeLossFraction**

  Represents the cumulative RTP loss fraction for a monitored flow (cfmRtpMetricsFrac).

- **cfmeRtpCumulativeLossIntervals**

  Represents the cumulative number of RTP loss intervals for a monitored flow (cfmRtpMetricsLIs).

- **cfmeRtpCumulativeAvgLossDuration**

  Represents the average duration of a RTP loss interval for a monitored flow (cfmRtpMetricsAvgLD).

- **cfmeRtpCumulativeAvgLossDistance**

  Represents the average RTP loss distance for a monitored flow (cfmRtpMetricsAvgLossDistance).

- **cfmeRtpCumulativeJitter**

  Represents the average inter-arrival jitter of RTP data packets for a monitored flow (cfmRtpMetricsJitter).

© 2008-2010 Cisco Systems, Inc. All rights reserved. Cisco Confidential

RTP Monitored Elements (cont.)

- **cfmeRtpLostPkts**

  Represents the number of lost RTP data packets for a monitored flow during the last measurement interval (cfmRtpMetricsIntLostPkts).

- **cfmeRtpLossFraction**

  Represents the RTP loss fraction for a monitored flow during the last measurement interval (cfmRtpMetricsIntFrac).

- **cfmeRtpLossIntervals**

  Represents the number of RTP loss intervals for a monitored flow during the last measurement interval (cfmRtpMetricsIntLIs).

- **cfmeRtpAvgLossDuration**

  Represents the average duration of a RTP loss interval for a monitored flow during the last measurement interval (cfmRtpMetricsIntAvgLD).

- **cfmeRtpAvgLossDistance**

  Represents the average RTP loss distance for a monitored flow during the last measurement interval (cfmRtpMetricsIntAvgLossDistance).

- **cfmeRtpMaxJitter**

  Represents the maximum inter-arrival jitter of RTP data packets for a monitored flow during the last measurement interval (cfmRtpMetricsIntJitter).

- **cfmeRtpMaxMinTransit**

  Represents the max-min transit time of RTP data packets for a monitored flow during the last measurement interval (cfmRtpMetricsIntTransit).

© 2008-2010 Cisco Systems, Inc. All rights reserved. Cisco Confidential

IP CBR Monitored Elements

- **cfmeIpCbrCumulativeLostPkts**

  Represents the cumulative number of lost packets for a monitored flow (cfmIpCbrMetricsLostPkts).

- **cfmeIpCbrCumulativeMrv**

  Represents the MRV for a monitored flow (cfmIpCbrMetricsMrv).

- **cfmeIpCbrLostPkts**

  Represents the number of lost packets for a monitored flow during the last measurement interval (cfmIpCbrMetricsIntLostPkts).

- **cfmeIpCbrDf**

  Represents the DF for the monitored flow during the last measurement interval (cfmIpCbrMetricsIntDf).

- **cfmeIpCbrMrv**

  Represents the MRV for the monitored flow during the last measurement interval (cfmMdiMetricsIntMrv).

© 2008-2010 Cisco Systems, Inc. All rights reserved. Cisco Confidential

Flow Monitor Alarm Conditions

- The following slide illustrates a logical representation of alarm conditions maintained for flow monitors.
- An instance of **cfmFlowMonitorConditions** indicates the standing conditions for the corresponding flow monitor.
- The corresponding instance of **cfmFlowMonitorConditionsProfile** indicates the condition profile that describes the standing conditions for the flow monitor.

  A conditions profile consists of one or more rows in the **cfmConditionTable**, where each row describes a single standing condition.

  The corresponding of instance of **cfmConditionAlarm** specifies whether a standing condition serves as an alarm condition.
- An instance of **cfmFlowMonitorAlarms** indicates the alarm conditions for the corresponding flow monitor.
- When the device detects a transition in state of an alarm condition (i.e., the XNOR of the last state and the current state is ‘1’), the device performs the actions specified by the corresponding instance of **cfmConditionAlarmActions**.
- In addition, the **cfmNotifyEnable** object must be set to ‘true’ in order for the device to generates a **cfmNotifyAlarm** notification.

© 2008-2010 Cisco Systems, Inc. All rights reserved. Cisco Confidential

Flow Monitor Alarm Conditions

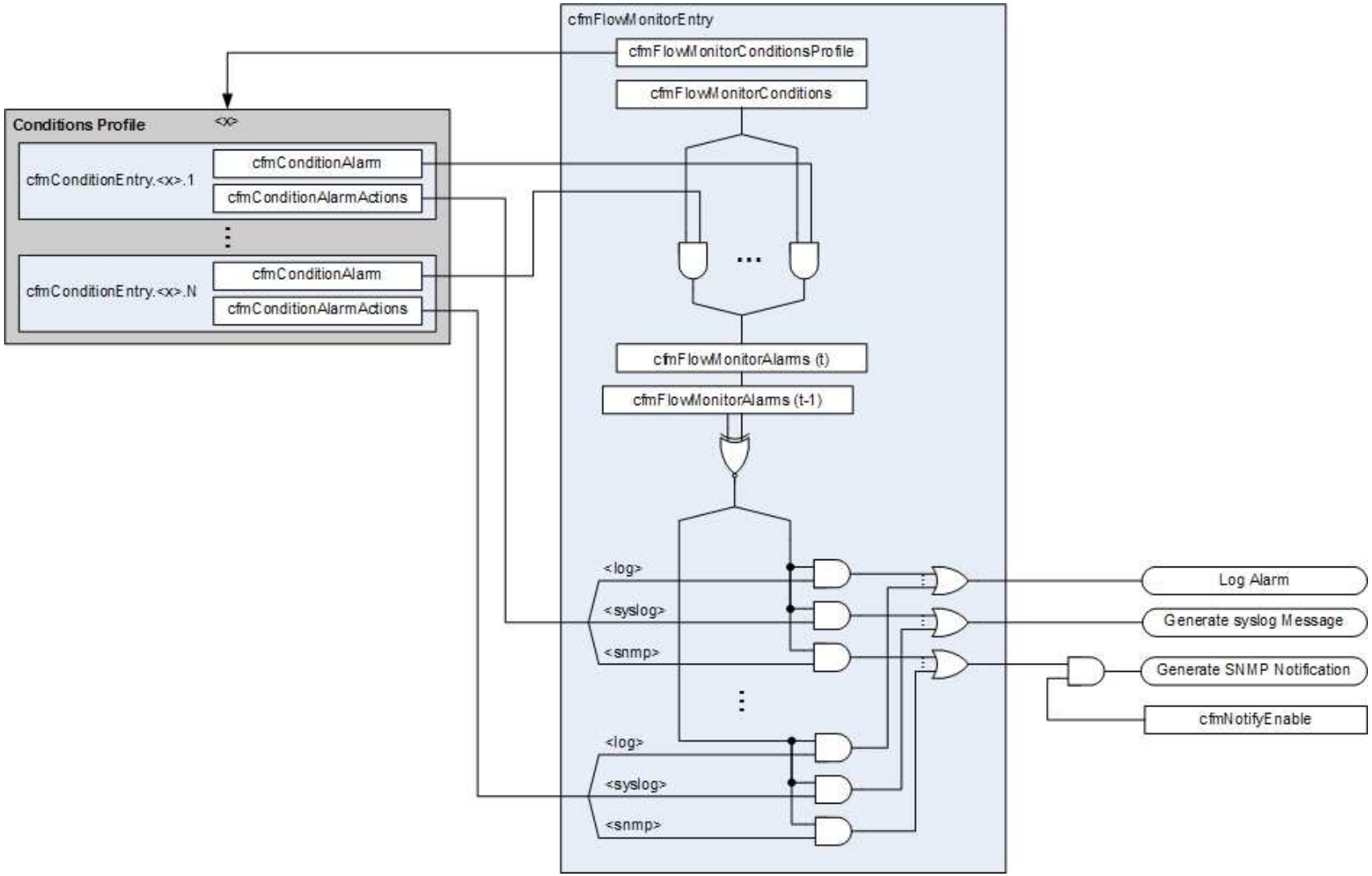

© 2008-2010 Cisco Systems, Inc. All rights reserved. Cisco Confidential

Monitored Flow Alarm Conditions

- The following slide illustrates a logical representation of alarm conditions maintained for flow monitors.
- An instance of **cfmFlowMetricsConditions** indicates the standing conditions for the corresponding flow monitor.
- The corresponding instance of **cfmFlowMetricsConditionsProfile** indicates the condition profile that describes the standing conditions for the flow monitor.

  A conditions profile consists of one or more rows in the **cfmConditionTable**, where each row describes a single standing condition.

  The corresponding of instance of **cfmConditionAlarm** specifies whether a standing condition serves as an alarm condition.
- An instance of **cfmFlowMetricsAlarms** indicates the alarm conditions for the corresponding flow monitor.
- When the device detects a transition in state of an alarm condition (i.e., the XNOR of the last state and the current state is ‘1’), the device performs the actions specified by the corresponding instance of **cfmConditionAlarmActions**.
- In addition, the **cfmNotifyEnable** object must be set to ‘true’ in order for the device to generates a **cfmNotifyAlarm** notification.

© 2008-2010 Cisco Systems, Inc. All rights reserved. Cisco Confidential

Monitored Flow Alarm Conditions

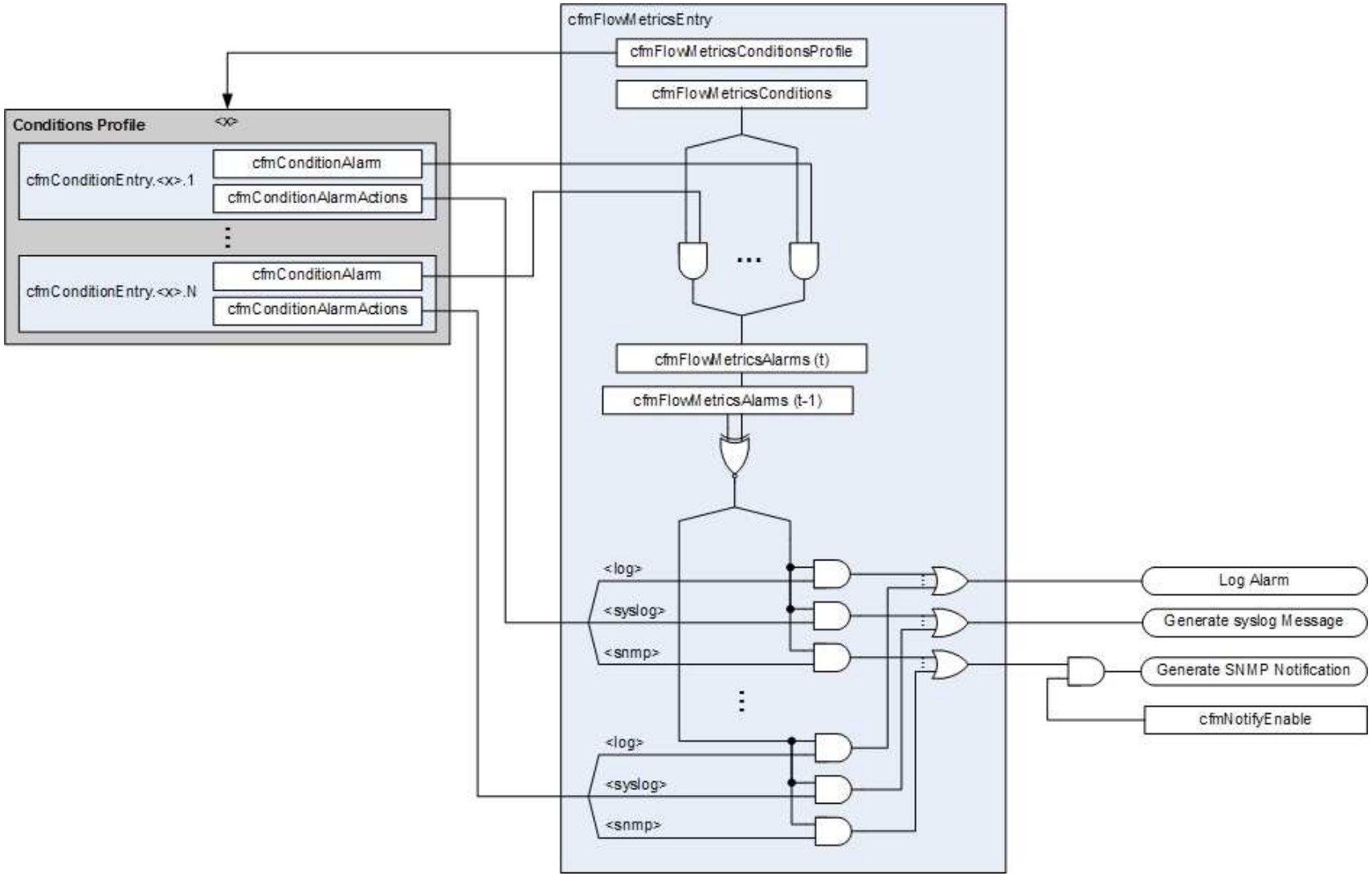

© 2008-2010 Cisco Systems, Inc. All rights reserved. Cisco Confidential

Alarm Groups

- An alarm group represents an single alarm condition that aggregates a standing condition for many monitored flows.
- The following slide illustrates a logical representation of an alarm group, which consists of the following parameters

  cfmAlarmGroupConditionsProfile – indicates the conditions profile containing the standing condition aggregated by the alarm group.

  cfmAlarmGroupConditionId – indicates the standing condition aggregated by the alarm group.

  cfmAlarmGroupThresholdUnits and **cfmAlarmGroupThreshold** – indicates the number of monitored flows that must assert the standing condition before the alarm group raises an alarm.

  cfmAlarmGroupFlowSet – indicates the set of monitored flows aggregated by the alarm group.

  cfmAlarmGroupFlowCount – indicates the number of monitored flows in the set of monitored flows aggregated by the alarm group.
- The *Count* function determines how many monitored flows in the associated flow set assert the standing condition.
- The *Threshold Crossed?* function determines whether the number of monitored flows asserting the standing condition satisfy the conditions to raise an alarm.

  If *Units* = ‘flows’ and *Count* ≥ *Threshold*, then raise an alarm.

  If *Units* = ‘percent’ and (*Count* * 100 / *Flows*) ≥ *Threshold*, then raise an alarm.
- When the device detects a transition in state of the alarm condition represented by the alarm group (i.e., the XNOR of the last state and the current state is ‘1’), the device performs the actions specified by the corresponding instance of **cfmConditionAlarmActions**.
- In addition, the **cfmNotifyEnable** object must be set to ‘true’ in order for the device to generates a **cfmNotifyAlarm** notification.

© 2008-2010 Cisco Systems, Inc. All rights reserved. Cisco Confidential

Alarm Groups

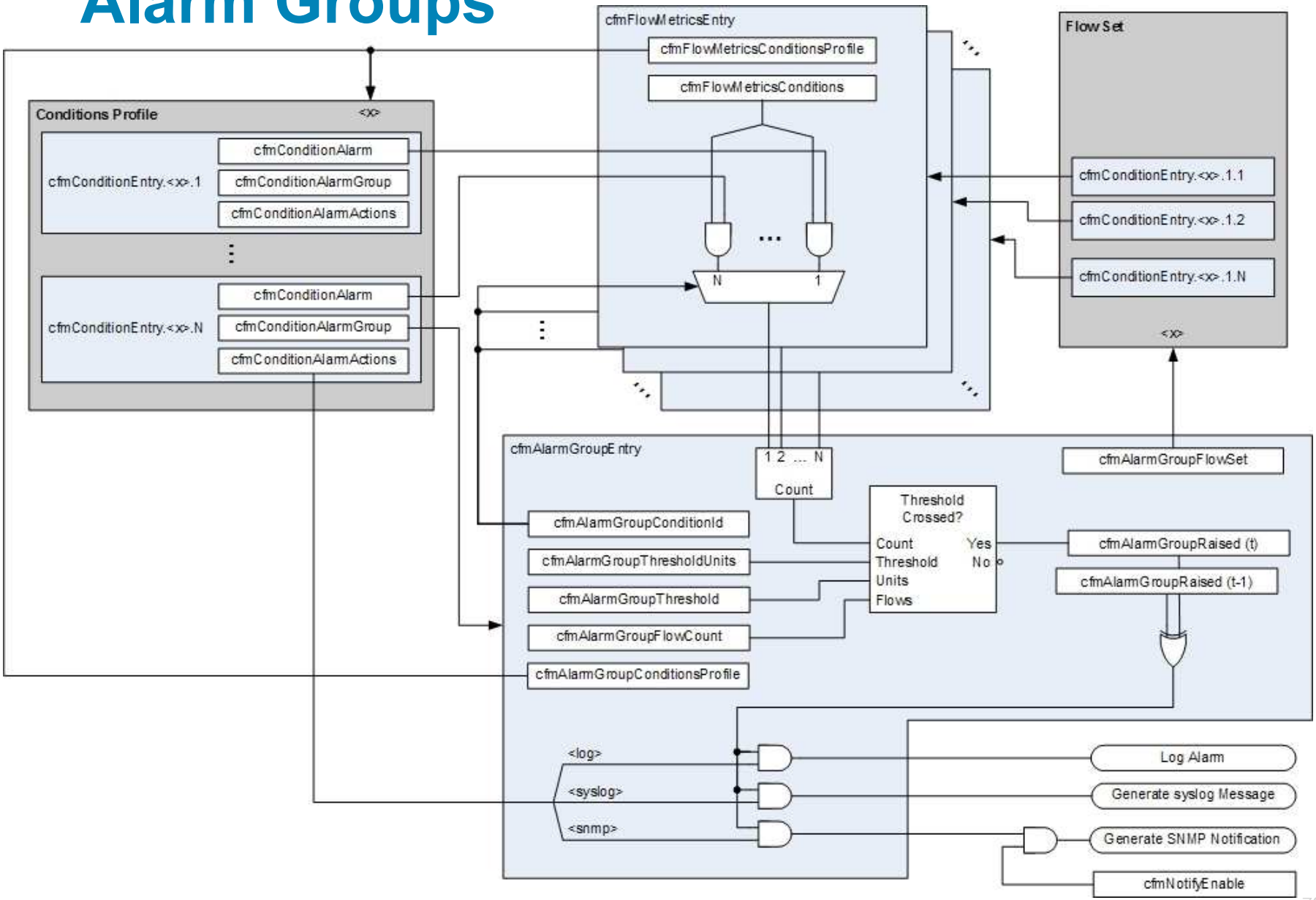

© 2008-2010 Cisco Systems, Inc. All rights reserved. Cisco Confidential

Alarm Groups

```
table cfmAlarmGroupEntry [cfmAlarmGroupId]
{
        cfmAlarmGroupId : Unsigned32 (0..4294967295) <access=not-accessible>
            // This object uniquely identifies the alarm group.
        cfmAlarmGroupDescr : SnmpAdminString <access=read-only>
            // This object indicates a human-readable description of the alarm group.
        cfmAlarmGroupConditionsProfile : FlowMonitorConditionsProfile <access=read-only>
            // This object indicates the profile the conditions profile that contains the description of the standing profile aggregated by the alarm
            group.
        cfmAlarmGroupConditionId : FlowMonitorConditionIdentifier <access=read-only>
            // This object indicates the standing condition aggregated by the alarm group.
        cfmAlarmGroupFlowSet : FlowSetIdentifier <access=read-only>
            // This object indicates the set of monitored flows aggregated by the alarm group.
        cfmAlarmGroupFlowCount : Gauge32 <access=read-only>
            // This object indicates the number of monitored flows aggregated by the alarm group.
        cfmAlarmGroupThresholdUnits : INTEGER { flows, percent } <access=read-only>
            // This object indicates the units for the corresponding instance of cfmAlarmGroupThreshold.
        cfmAlarmGroupThreshold : Unsigned32 (0..4294967295) <access=read-only>
            // This object indicates the number of flows that must assert a standing condition indicated by the corresponding instance of
            cfmAlarmGroupConditions before raising an alarm.
            // If the corresponding instance of cfmAlarmGroupThresholdUnits is ‘flows’, then the value of this column is absolute.
            // If the corresponding instance of cfmAlarmGroupThresholdUnits is ‘percent’, then the value of this column represents a percentage of
            the number of flows contained by the alarm group.
        cfmAlarmGroupRaised : TruthValue <access=read-only>
            // This object indicates whether the alarm group has raised an alarm.
        cfmAlarmGroupCurrentCount : Gauge32 <access=read-only>
            // This object indicates the number of flows contained by the alarm group.
}
```

© 2008-2010 Cisco Systems, Inc. All rights reserved. Cisco Confidential

Alarm Groups (cont.)

table cfmAlarmGroupFlowEntry [cfmAlarmGroupFlowSetId, cfmAlarmGroupFlowMonitorId, cfmAlarmGroupFlowId]

{

cfmAlarmGroupFlowSetId : Unsigned32 (0..4294967295) <access=not-accessible>

// This object uniquely identifies a set of flows. The value of this column does not necessarily correspond to cfmAlarmGroupId, thereby allowing a set of flows to be associated with more than one alarm group.

cfmAlarmGroupFlowMonitorId : FlowMonitorIdentifier <access=not-accessible>

// This object identifies the flow monitor that monitors the flow.

cfmAlarmGroupFlowId : FlowIdentifier <access=read-only>

// This object identifies the monitored flow.

}

© 2008-2010 Cisco Systems, Inc. All rights reserved. Cisco Confidential

Alarm History

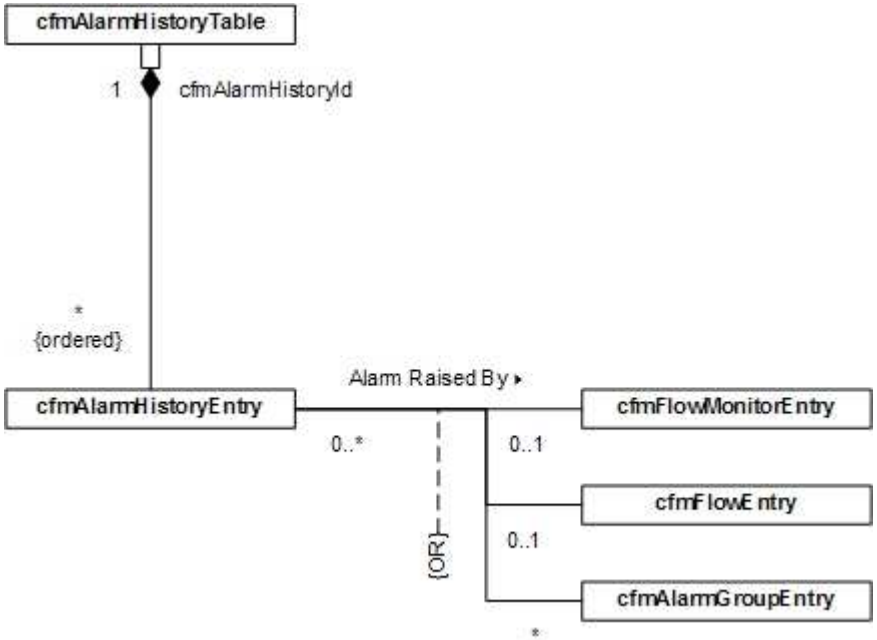

© 2008-2010 Cisco Systems, Inc. All rights reserved. Cisco Confidential

Alarm History (cont.)

cfmAlarmHistorySize : Unsigned32 (1..4294967295) <access=read-write, default=0>

// This object specifies the maximum number of rows the cfmAlarmHistoryTable can contain at any given time. If a flow monitor raises/clears an alarm and the cfmAlarmHistoryTable already contains a number of rows equal to the value of this object, then it destroys the oldest row before creating a new one.

cfmAlarmHistoryLastId : Unsigned32 (1..4294967295) <access=read-only>

// This object indicates the value of cfmAlarmHistoryId corresponding to the last row created in the cfmAlarmHistoryTable.

table cfmAlarmHistoryEntry [cfmAlarmHistoryId]

{

cfmAlarmHistoryId : Unsigned32 (1..4294967295) <access=not-accessible>

// This object uniquely identifies the alarm entry.

cfmAlarmHistoryType : INTEGER { raised, cleared } <access=read-only>

// This object indicates whether the alarm was cleared or raised.

cfmAlarmHistoryEntity : RowPointer <access=read-only>

// This object indicates the entity to which the alarm has an association.

// If the alarm is against a flow monitor, then this column indicates a row in the cfmFlowMonitorTable.

// If the alarm is against a monitored flow, then this column indicates a row in the cfmFlowTable.

// If the alarm is against an alarm group, then this column indicates a row in the cfmAlarmGroupTable.

cfmAlarmHistoryConditionsProfile : FlowMonitorConditionsProfile <access=read-only>

// This object indicates the conditions profile that contains the description of the alarm condition.

cfmAlarmHistoryAlarmId : FlowMonitorConditionIdentifier <access=read-only>

// This object indicates the description of the alarm condition.

cfmAlarmHistorySeverity : CiscoAlarmSeverity <access=read-only>

// This object indicates the severity of the alarm.

cfmAlarmHistoryTime : TimeStamp <access=read-only>

// This object indicates the value of sysUpTime when the alarm condition changed state.

}

© 2008-2010 Cisco Systems, Inc. All rights reserved. Cisco Confidential

Alarm Notifications

cfmNotifyEnable : TruthValue <access=read-write, default=false>

// This object specifies whether the device generates the cfmNotifyAlarmAsserted and cfmNotifyAlarmCleared notifications.

notification cfmNotifyAlarm

{

cfmAlarmHistoryType,
cfmAlarmHistoryEntity,
cfmAlarmHistoryConditionsProfile,
cfmAlarmHistoryConditionId,
cfmAlarmHistorySeverity,
cfmAlarmHistoryTime

}

// This notification indicates that an alarm condition against a flow monitor or monitored flow has changed state.

© 2008-2010 Cisco Systems, Inc. All rights reserved. Cisco Confidential

Monitoring Alarms

- An EMS/NMS can monitor alarms by polling every instance of **cfmFlowMonitorAlarms** and **cfmFlowMetricsAlarms**.

  Observe that this method does not scale for devices capable of monitoring sufficiently large numbers of traffic flows.

- An EMS/NMS can monitor alarm groups by polling every instance of **cfmAlarmGroupAlarms**.

  This method scales as long as the device limits the number of alarm groups to a reasonable number, such as less than 100 alarm groups.

- An EMS/NMS can monitor alarms by polling **cfmAlarmHistoryLastId**, which changes when a flow monitor creates a row in the alarm history table.

  Observe that there exist circumstances that can result in an “alarm storm”; that is, flow monitor(s) can assert hundreds or even thousands of alarm conditions in a very short interval of time.

  Under these circumstances, the alarm history table stands a good chance of overflowing.

  Thus, an EMS/NMS has no guarantee that it can maintain a reliable and accurate depiction of the device’s state by polling the alarm history table.

- An EMS/NMS can listen for cfmAlarmAsserted and cfmAlarmCleared notifications.

  Observe that SNMP notifications are not reliable and an EMS/NMS should only used them to direct its actions.

- An EMS/NMS can monitor alarms by polling instances of the following objects: **cfmFlowMonitorAlarmCriticalCount**, **cfmFlowMonitorAlarmMajorCount**, **cfmFlowMonitorAlarmMinorCount**, and **cfmFlowMonitorAlarmSeverity**.

  When the EMS/NMS observes a change in the instances of these objects, it can obtain a snapshot of the flow monitor’s state by polling the instances of cfmFlowMonitorAlarms and cfmFlowMetricsAlarms for the corresponding flow monitor.

© 2008-2010 Cisco Systems, Inc. All rights reserved. Cisco Confidential

CISCO